Polo 1995 ➤

4-Cyl. injection engine (4 valve), Mechanics									
Engine ID	AFH								

Edition 04.1996

Protected by copyright. Copying for private or commercial purposes, in whole, is not permitted unless authorised by Volkswagen AG. Volkswagen AG does not guarantee or accept any liability with respect to the correctness of information in this document. Copyright by Volkswagen AG.

satelettronica

List of Workshop Manual Repair GroupsList of Workshop Manual Repair GroupsList of Workshop Manual Repair Groups

Polo 1995 ➤

4-Cyl. injection engine (4 valve), Mechanics

Repair Group

00 - Technical data
10 - Removing and installing engine
13 - Crankshaft group
15 - Cylinder head, Valve gear
17 - Lubrication
19 - Cooling system
20 - Fuel supply system
26 - Exhaust system

Protected by copyright. Copying for private or commercial purposes, in part or in whole, is not permitted unless authorised by Volkswagen AG. Volkswagen AG does not guarantee or accept any liability with respect to the correctness of information in this document. Copyright by Volkswagen AG.

satelettronica

Technical information should always be available to the foremen and mechanics, because their careful and constant adherence to the instructions is essential to ensure vehicle road-worthiness and safety. In addition, the normal basic safety precautions for working on motor vehicles must, as a matter of course, be observed.

All rights reserved.
No reproduction without prior agreement from publisher.

Copyright © 2010 Volkswagen AG, Wolfsburg

00050206320

Contents

00 - Technical data 1
1 Technical data 1
1.1 Technical data 1
1.2 Engine number 1
1.3 Engine data 1

10 - Removing and installing engine 2
1 Removing and installing engine 2
1.1 Removing and installing engine 2
1.2 Notes on removing 2
1.3 Notes on installing 4
1.4 Tightening torques 5
1.5 Assembly mountings 6
1.6 Additional information and removal instructions for vehicles with air conditioner 7

13 - Crankshaft group 8
1 Dismantling and assembling engine 8
1.1 Dismantling and assembling engine 8
1.2 Removing and installing ribbed belt 17
1.3 Checking valve timing 17
1.4 Removing and installing toothed belt 18
1.5 Checking semi-automatic toothed belt tensioning roller 21
2 Dismantling and assembling cylinder block, crankshaft and flywheel 23
2.1 Dismantling and assembling cylinder block, crankshaft and flywheel 23
2.2 Renewing crankshaft oil seal - pulley end - 26
2.3 Crankshaft dimensions 29
3 Dismantling and assembling pistons and conrods 30
3.1 Dismantling and assembling pistons and conrods 30
3.2 Piston and cylinder dimensions 35

15 - Cylinder head, Valve gear 36
1 Removing and installing cylinder head 36
1.1 Removing and installing cylinder head 36
1.2 Removing and installing cylinder head 38
1.3 Checking compressions 41
2 Servicing valve gear 42
2.1 Servicing valve gear 42
2.2 Reworking valve seats 48
2.3 Replacing camshaft oil seal 50
2.4 Checking hydraulic bucket tappets 51
2.5 Removing and installing camshaft 52
2.6 Checking valve guides 54
2.7 Renewing valve guides 54
2.8 Renewing valve stem seals 55

17 - Lubrication 57
1 Removing and installing parts of the lubrication system 57
1.1 Removing and installing parts of the lubrication system 57
1.2 Removing and installing oil sump 67
1.3 Removing and installing Duo-centric oil pump 69
1.4 Checking oil pressure and oil pressure switch 72

19 - Cooling system 75

satelettronica

1 Removing and installing parts of cooling system . . . 75
1.1 Removing and installing parts of cooling system . . . 75
1.2 Parts of cooling system body side . . . 76
1.3 Parts of cooling system - engine side . . . 78
1.4 Draining and filling cooling system . . . 83
1.5 Removing and installing radiator . . . 84

20 - Fuel supply system . . . 86
1 Removing and installing parts of fuel supply system . . . 86
1.1 Removing and installing parts of fuel supply system . . . 86
1.2 Removing and installing fuel tank with its attachments . . . 87
1.3 Safety precautions when working on the fuel supply system . . . 92
1.4 Rules for cleanliness . . . 93
1.5 Checking fuel pump . . . 93
1.6 Removing and installing fuel delivery unit . . . 97
1.7 Removing and installing fuel tank . . . 98
1.8 Adjusting throttle cable . . . 99
1.9 Removing and installing parts of the activated charcoal filter system . . . 100
1.10 Checking fuel tank breather . . . 101

26 - Exhaust system . . . 104
1 Removing and installing parts of exhaust system . . . 104
1.1 Removing and installing parts of exhaust system . . . 104
1.2 Exhaust gas recirculation system . . . 109
1.3 Removing and installing parts of exhaust gas recirculation system . . . 110
1.4 Checking exhaust gas recirculation valve . . . 111

Protected by copyright. Copyright by Volkswagen AG. Volkswagen AG does not guarantee or accept any liability with respect to the correctness of information in this document. Copyright by Volkswagen AG. Transmitted under the terms of the contract for use of the electronic repair manual system. www.vwtechnicalinformation.com
satelettronica

00 - Technical data

1 - Technical data

1.1 - Technical data

1.2 - Engine number

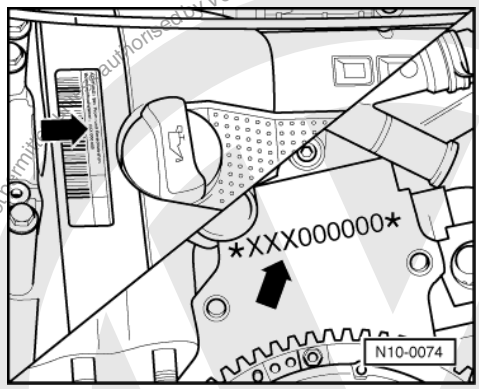

-> The engine number ("Code letters" and "Serial number") can be found on the front of the cylinder block at the gearbox end below the thermostat housing.

Additionally there is a sticker on the toothed belt guard with "Engine code" and "Serial number".

The engine code is also included on the vehicle data plate.

1.3 - Engine data

Engine code		AFH
Manufactured		05.96 ▸
Capacity	cm3	1390
Output	kW at rpm	74/6000
Torque	Nm at rpm	128/4400
Bore	mm ø	76.5
Stroke	mm	75.6
Compression ratio		10.5
RON	min.	98 unleaded1)
Injection, ignition		1AV
Knock control		x
Self diagnosis		x
Lambda control		x
Exhaust gas recirculation		x
Catalyst		x
Charging		-

1) In exceptional circumstances min. 95 RON, however with reduced performance

Protected by copyright. Copying for private or commercial purposes, in part or in whole, is not permitted unless authorised by Volkswagen AG. Volkswagen AG does not guarantee or accept any liability with respect to the correctness of information in this document. Copyright by Volkswagen AG.
satelettronica

10 - Removing and installing engine

1 - Removing and installing engine

1.1 - Removing and installing engine

Special tools, testers and auxiliary items

- Drip tray V.A.G 1306
- Pliers V.A.G 1921 for spring type clips
- Lifting tackle 2024 A
- Workshop crane V.A.G 1202 A
- Grease G 000 100
- Torque wrench V.A.G 1331 (5...50 Nm)
- Torque wrench V.A.G 1332 (40...200 Nm)
- Cable tie

If the engine is to be dismantled:

- Engine bracket VW 540

1.2 - Notes on removing

- First check whether a coded radio is fitted. If this is the case obtain the anti-theft coding.
- The engine is removed forwards together with the gearbox.
- With the ignition switched off disconnect the battery earth strap and remove battery.
- Release plus wire from battery to starter motor (is removed together with assembly).

Note:

All cable ties that have been released or cut-open when removing the engine are to be reinstated at the same location when reinstalling engine.

- Drain coolant => Page 83 .
- Removing lock carrier with attachments:

=> General body repairs; Repair group 50; Body, front; Removing and installing lock carrier with attachments. Body, front Removing and installing lock carrier with attachments.

- Disconnecting clutch cable:

=> 5-Speed manual gearbox 085; Repair group 30; Servicing clutch mechanism; Removing and installing clutch cable. Servicing clutch mechanism Removing and installing clutch cable.

- Remove ribbed belt => Page 17 .
- Unbolt power steering vane pump and secure to sub-frame with wire; hoses remain connected:

=> Running gear; Repair group 48; Assembly overview: vane pump, reservoir, hydraulic lines; Removing and installing power steering vane pump. Assembly overview: vane pump, reservoir, hydraulic lines Removing and installing power steering vane pump.

Vehicles with air conditioner:

- Observe additional information and removal instructions => Page 7 .

Protected by copyright. Copying for private or commercial purposes, in part or in whole, is not permitted unless authorised by Volkswagen AG. Volkswagen AG does not guarantee or accept any liability with respect to the correctness of information in this document. Copyright by Volkswagen AG.
satelettronica

Protected by copyright. Copyright by Volkswagen AG. Volkswagen AG does not guarantee or accept any liability with respect to the correctness of information in this document. Copying for private or commercial purposes, in part or in whole, is not permitted unless authorised by Volkswagen AG.

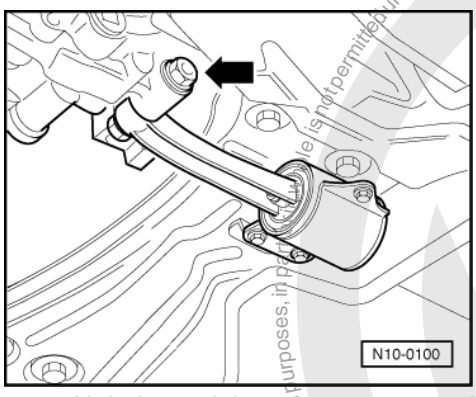

- -> Unbolt pendulum support on gearbox.

- Tie-up power steering reservoir.

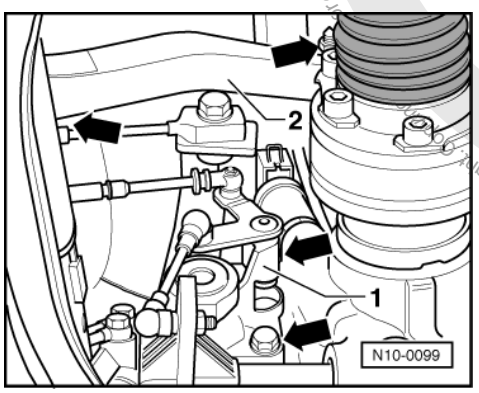

- -> Unbolt mounting bracket -1- for selector mechanism relay lever from gearbox.
- Unbolt support -2- for selector mechanism from sub-frame and engine.

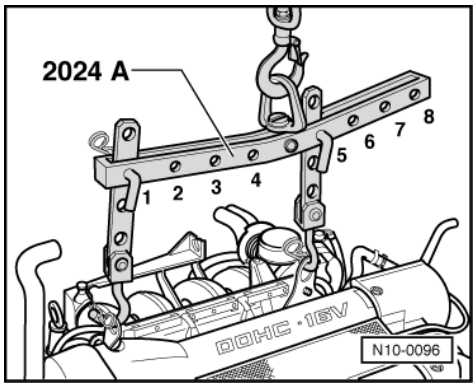

- -> Attach lifting tackle 2024 A as follows and lift slightly with workshop crane:

  Pulley end:
  3rd hole in hook at position 1

  Flywheel end:
  3rd hole in hook at position 5

Warning! The hooks and locating pins must be secured with locking pins.

Notes:

- The positions marked 1...4 on the bar must be towards the pulley end.

satelettronica

- The holes in the hooks are counted up from the hook.

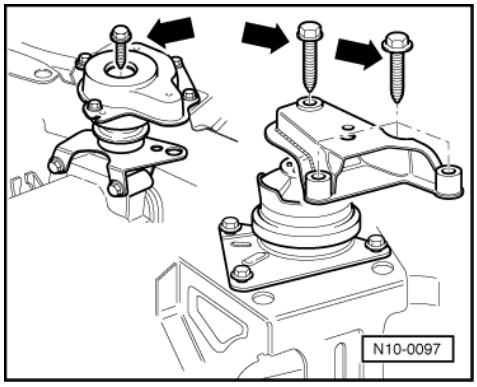

- -> Unbolt assembly at gearbox and engine mountings.
- Lower assembly until it is released from the gearbox mounting.
- Take assembly out forwards. When doing this turn assembly and lift again slightly.

Note:

When lifting out the assembly must be carefully guided, to prevent damage to the bodywork.

When working on the engine, it should be secured to the engine stand using the engine bracket VW 540.

1.3 - Notes on installing

Installing is basically in the reverse order but note following:

- Check clutch release bearing for wear, renew if necessary.
- Lightly grease clutch release bearing, release bearing guide sleeve and splines on input shaft with G 000 100.
- Check whether the dowel sleeves for centralising engine/gearbox are in the cylinder block, install if necessary.
- When swinging the assembly in, ensure that clearance exists between the drive shafts.
- Align engine mountings stress-free by rocking, if necessary loosen engine mountings to body.

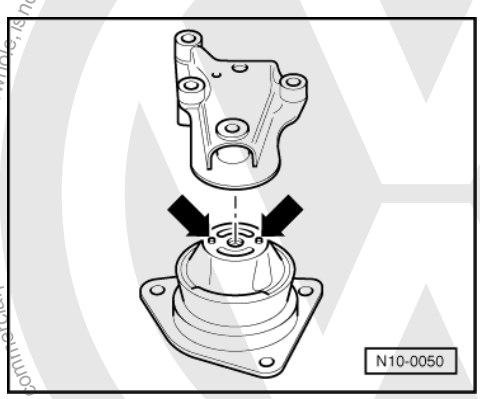

- -> When installing the engine mounting ensure that the bonded rubber bush pins locate in the engine mounting -arrows-.
- Renew pointed bolt for securing shift finger (clean threads in shift finger).
- Installing P.A.S. vane pump:

=> Running gear; Repair group 48; Assembly overview: vane pump, reservoir, hydraulic lines; Removing and installing power steering vane pump. Assembly overview: vane pump, reservoir, hydraulic lines Removing and installing power steering vane pump.

- Install clutch cable:

satelettronica

=> 5-Speed manual gearbox 085; Repair group 30; Servicing clutch mechanism; Removing and installing clutch cable. Servicing clutch mechanism Removing and installing clutch cable.

- Install lock carrier with attachments:

=> General body repairs; Repair group 50; Body, front; Removing and installing lock carrier with attachments. Body, front Removing and installing lock carrier with attachments.

Vehicles with air conditioner:

- Install air conditioner compressor:

=> Heating, air conditioner system; Repair group 87

- Electrical connections and routing:

=> Current flow diagrams, Electrical fault finding and Fitting locations

- Secure all pipes and hoses with cable ties and clips again. When doing this note coloured markings.
- Fill with coolant => Page 83
- Adjust throttle cable => Page 99
- Check and if necessary adjust ignition timing:

=> Repair group 28; Injection and ignition system; Checking and adjusting ignition timing. Injection and ignition system Checking and adjusting ignition timing.

- Perform basic setting:

=> Repair group 24; Injection and ignition system; Performing basic setting Injection and ignition system Performing basic setting

- Match engine electronics control unit to immobilizer:

=> Repair group 24; Injection and ignition system; Matching engine electronics control unit to immobilizer. Injection and ignition system Matching engine electronics control unit to immobilizer.

1.4 - Tightening torques

Bolted joint		Tightening torque
Engine to gearbox	M10	45 Nm
	M12	80 Nm
Starter to gearbox		20 Nm
Drive shafts to flanged shafts		45 Nm
Flywheel shield plate		10 Nm
Selector mech. mount on gearbox		25 Nm
Selector mech. support on engine and sub-frame		20 Nm
Selector finger on selector rods		25 Nm
Exhaust pipe to manifold		40 Nm

Protected by copyright. Copying for private or commercial purposes, in part or in whole, is not permitted unless authorised by Volkswagen AG. Volkswagen AG does not guarantee or accept any liability with respect to the correctness of information in this document. Copyright by Volkswagen AG.
satelettronica

1.5 - Assembly mountings

Tightening torques

Note:

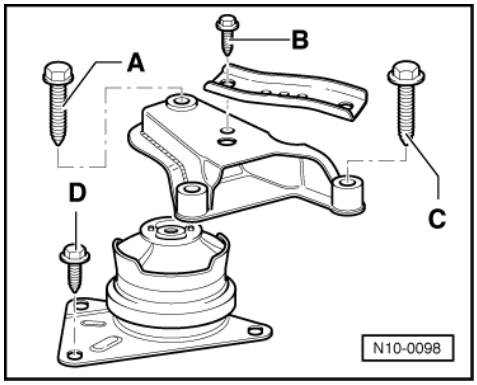

The bolts must not be used again.

-> Engine mounting

A = 50 Nm (Bolt M8: 25 Nm)
B = 50 Nm
C = 20 Nm + 1/8 turn (45 °) further

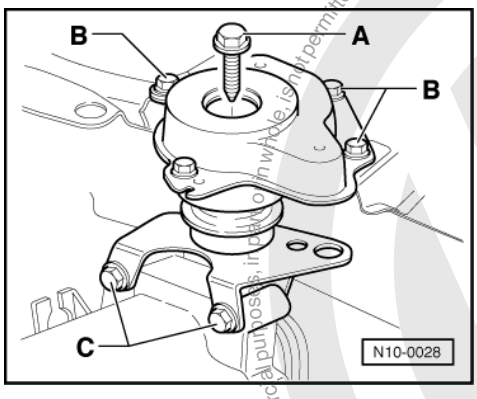

-> Gearbox mounting

A = 80 Nm
B = 20 Nm + 1/8 turn (45 °) further
C = 50 Nm

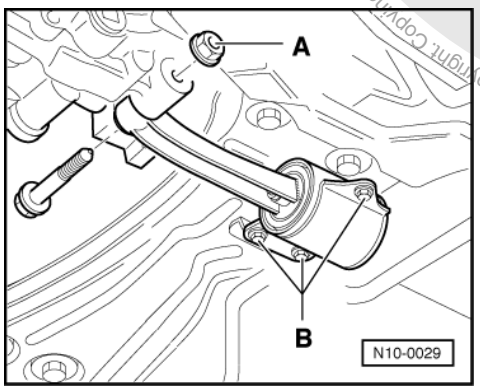

Protected by copyright. Copying for private or commercial purposes, in part or in whole, is not permitted unless authorised by Volkswagen AG. Volkswagen AG does not guarantee or accept any liability with respect to the correctness of information in this document. Copyright by Volkswagen AG.
satelettronica

-> Pendulum support

A = 50 Nm (tighten on nut)
B = 35 Nm

1.6 - Additional information and removal instructions for vehicles with air conditioner

Protected by copyright. Copying for private or commercial purposes, in part or in whole, is not permitted unless authorised by Volkswagen AG. Volkswagen AG does not guarantee or accept any liability with respect to the correctness of information in this document. Copyright by Volkswagen AG.

Warning! The air conditioner refrigerant circuit must not be opened.

Note:

To prevent damage to condenser also to the refrigerant pipes/hoses, ensure that the pipes and hoses are not stretched, kinked or bent.

To facilitate removing and installing the engine without opening the refrigerant circuit:

- Unbolt air conditioner fluid reservoir and allow to hang free.
- Unbolt retaining clamp(s) for refrigerant lines.
- Remove ribbed belt => Page 17 .
- Removing lock carrier with attachments:

=> General body repairs; Repair group 50; Body, front; Removing and installing lock carrier with attachments. Body, front Removing and installing lock carrier with attachments.

- Removing air conditioner compressor:

=> Heating, air conditioner system; Repair group 87

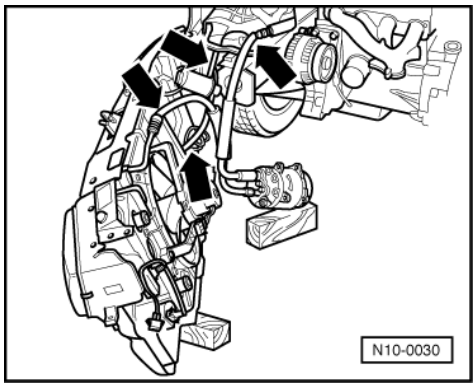

- -> Remove air conditioner compressor and lay to one side with lock carrier so that the refrigerant hoses - arrows- are not stressed.

satelettronica

13 - Crankshaft group

1 - Dismantling and assembling engine

1.1 - Dismantling and assembling engine

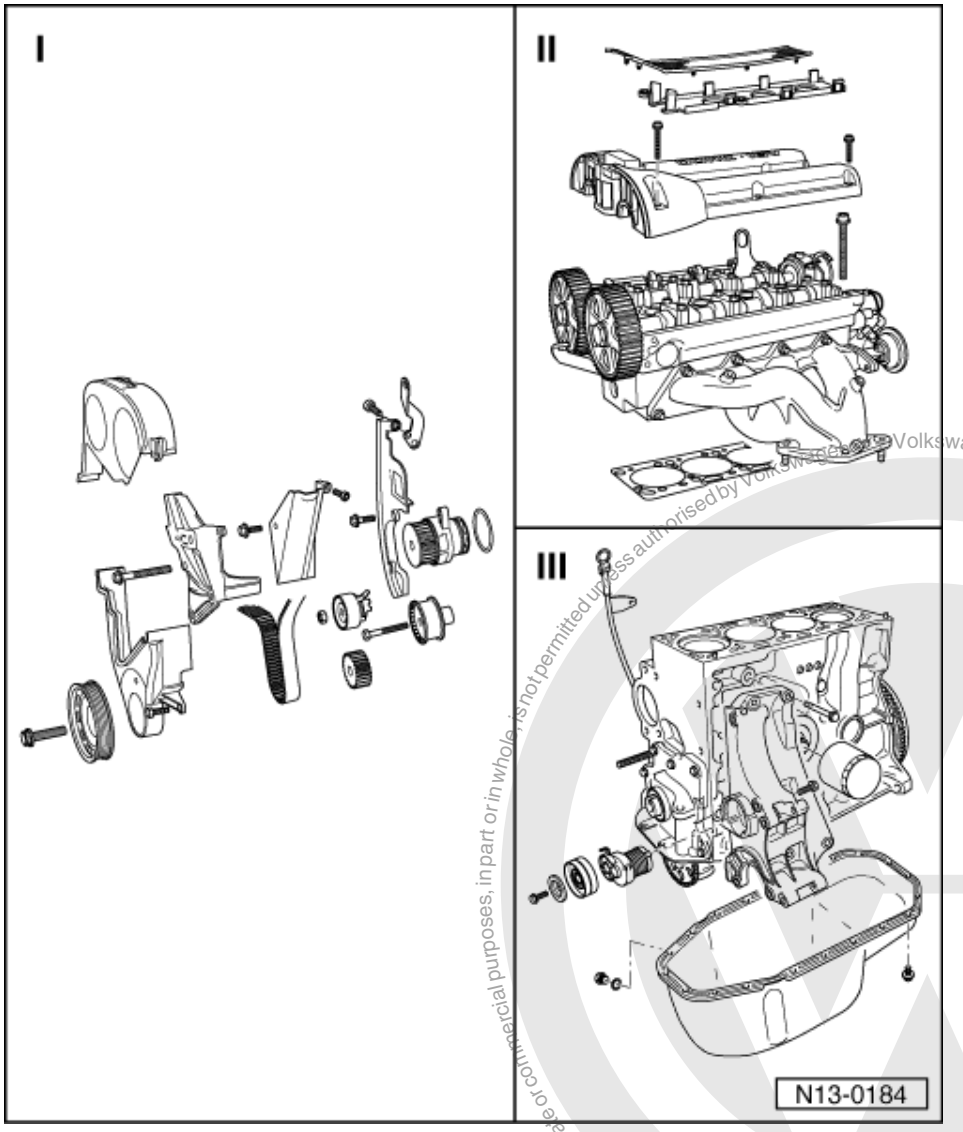

I =>Page 9

II =>Page 12

III =>Page 14

Protected by copyright. Copying for private or commercial purposes, in part or in whole, is not permitted unless authorised by Volkswagen AG. Volkswagen AG does not guarantee or accept any liability with respect to the correctness of information in this document. Copyright by Volkswagen AG.
satelettronica

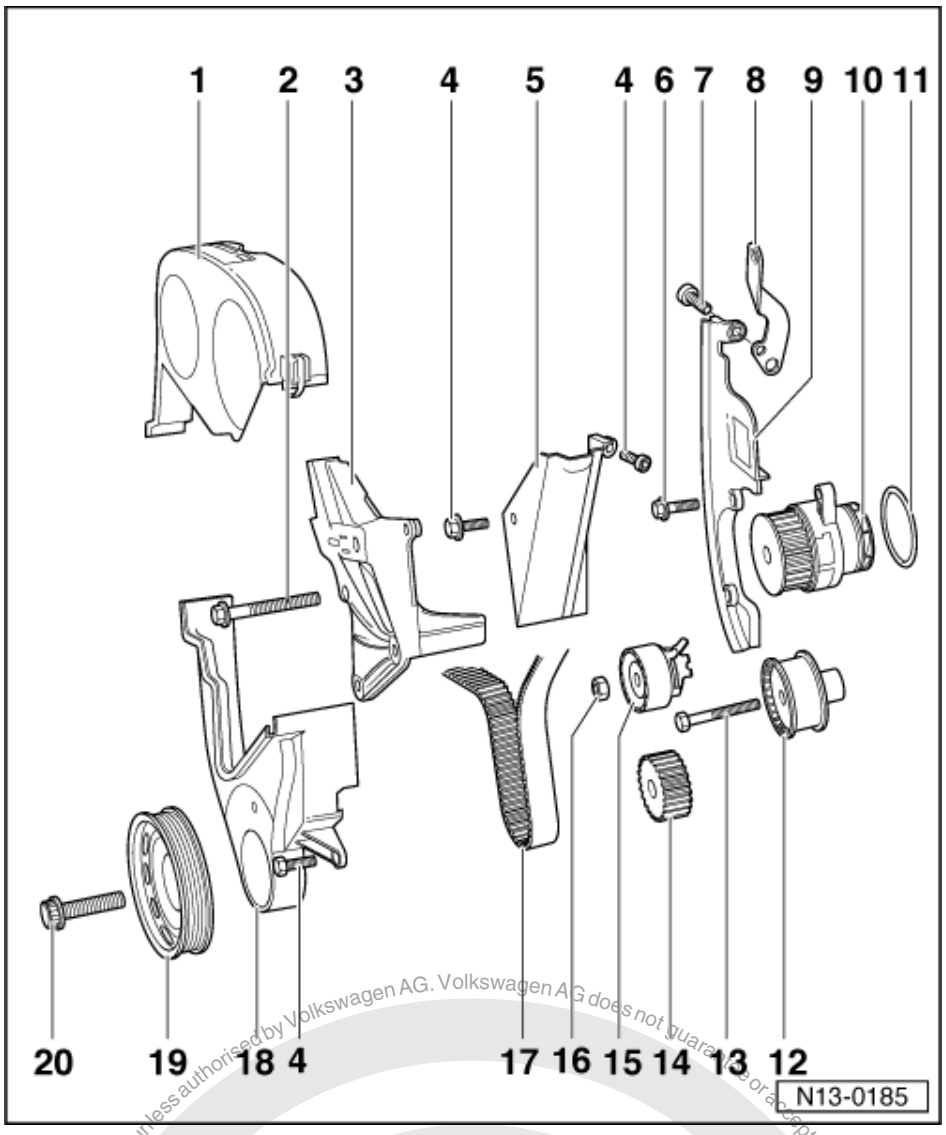

Part I

1 Toothed belt guard - upper part
2 40 Nm + 1/4turn (90 °) further
3 Console
4 10 Nm
5 Front toothed belt guard
6 20 Nm
7 20 Nm
8 Lifting eye
9 Rear toothed belt guard
10 Coolant pump
11 O-Ring
◆ Renew
12 Idler roller

Protected by copyright. Copying for private or commercial purposes, in part or in whole, is not permitted unless authorised by Volkswagen AG. Volkswagen AG does not guarantee or accept any liability with respect to the correctness of information in this document. Copyright by Volkswagen AG.
satelettronica

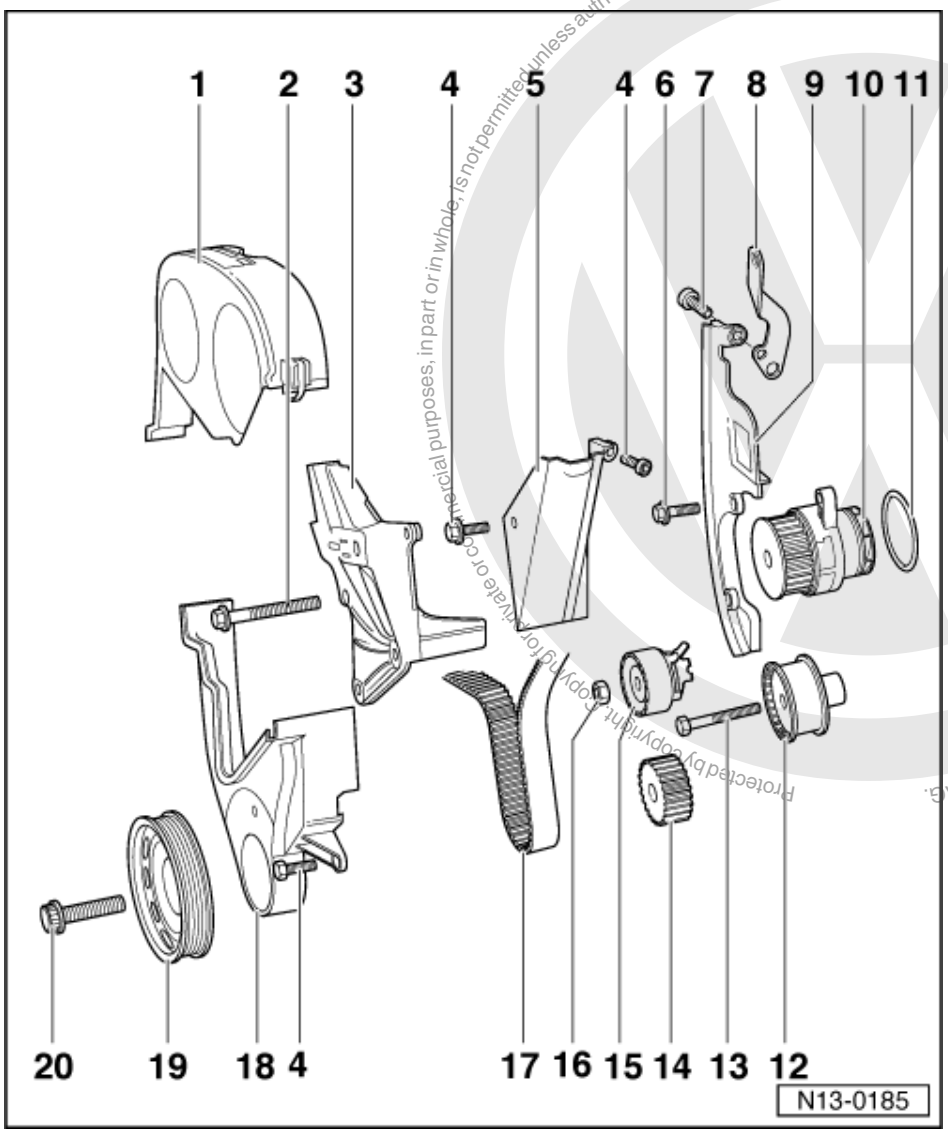

13 20 Nm

14 Crankshaft toothed belt sprocket

- Note position when installing toothed belt
  => Page 18

15 Tensioner

- Checking => Page 21
- Tensioning toothed belts
  => Page 18

16 20 Nm

17 Toothed belt

- Mark D.O.R. before removing
- Check for wear
- Do not kink
- Toothed belt routing => Fig. 1
- Removing and installing
  => Page 18

18 Toothed belt guard - lower part

Protected by copyright. Copying for private or commercial purposes, in part or in whole, is not permitted unless authorised by Volkswagen AG. Volkswagen AG does not guarantee or accept any liability with respect to the correctness of information in this document. Copyright by Volkswagen AG.
satelettronica

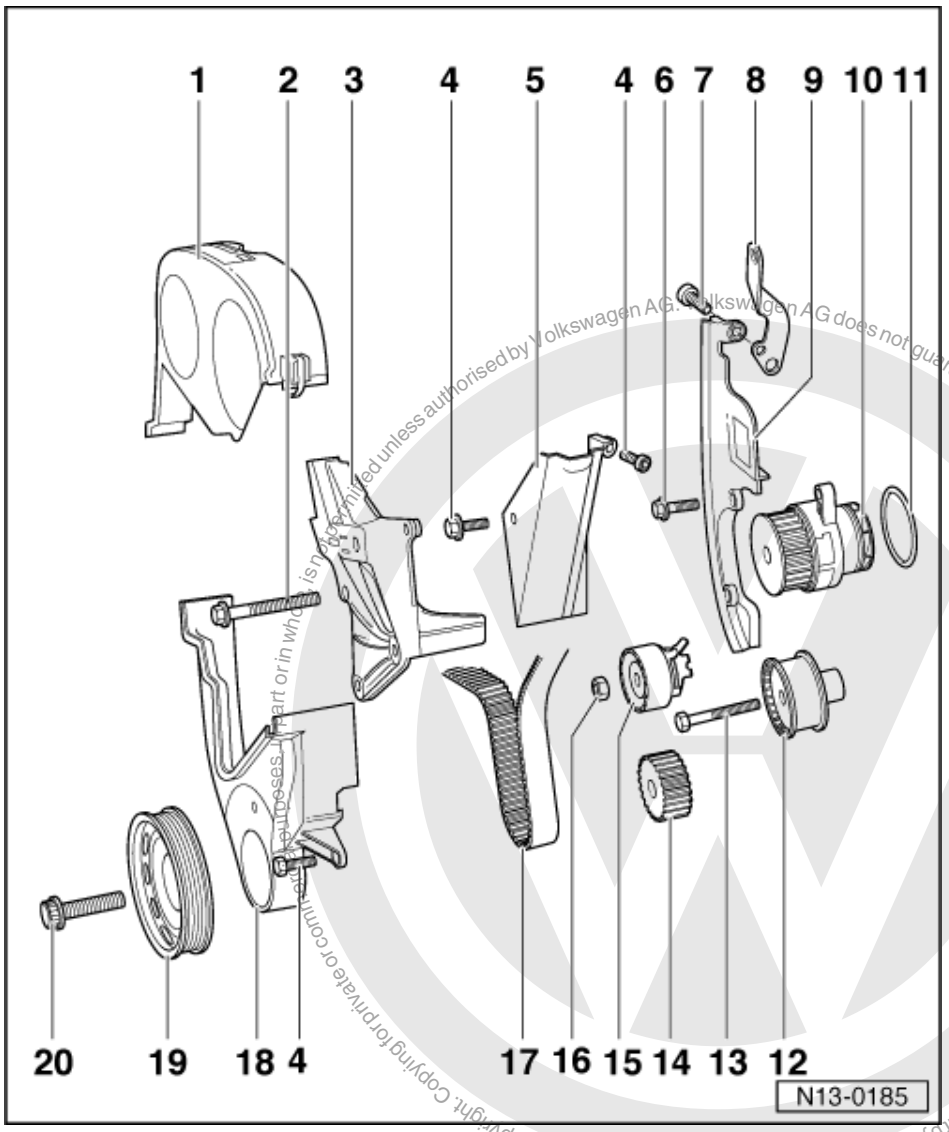

19 Belt pulley

- When installing note fixing arrangement
- Removing and installing
  => Page 18 ; Removing, installing and tensioning toothed belt
- Removing and installing ribbed belt => Page 17

20 90 Nm + 1/4 turn (90 °) further

- Renew
- Oil threads
- The turning further can be done in several stages
- The turning further angle can be checked with a commercial protractor e.g. Hazet 6690

Protected by copyright. Copying for private or commercial purposes, in part or in whole, is not permitted unless authorised by Volkswagen AG. Volkswagen AG does not guarantee or accept any liability with respect to the correctness of information in this document. Copyright by Volkswagen AG.
satelettronica

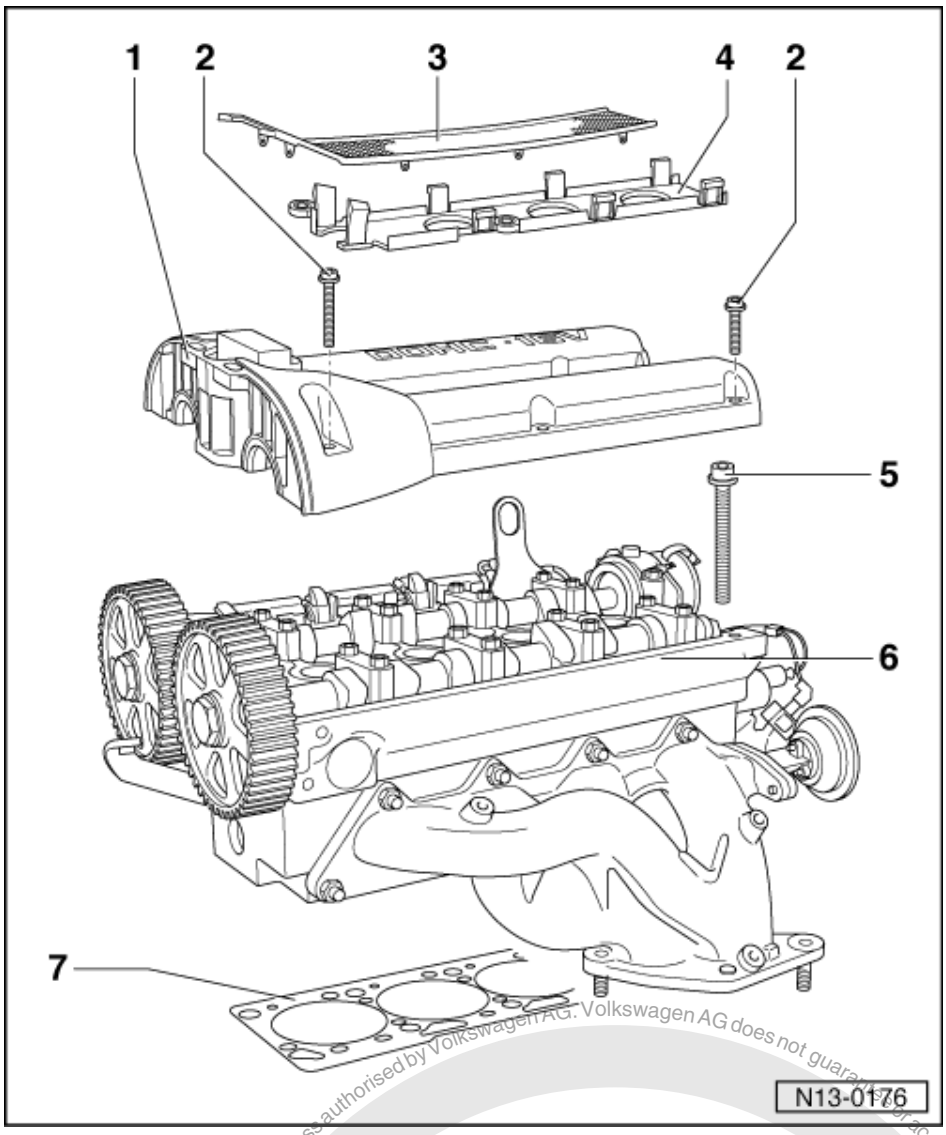

Part II

1 Cylinder head cover
- Before fitting gasket coat transition between bearing cap/cylinder head and the half moon shaped recesses with D 454 300 A3

2 10 Nm
- Tighten from centre outwards

3 HT cable cover

4 Retainer
- For HT cable cover

5 Cylinder head bolt
- Renew
- Note installation instructions and sequence when loosening and tightening => Page 38

Protected by copyright. Copying for private or commercial purposes, in part or in whole, is not permitted unless authorised by Volkswagen AG. Volkswagen AG does not guarantee or accept any liability with respect to the correctness of information in this document. Copyright by Volkswagen AG.
satelettronica

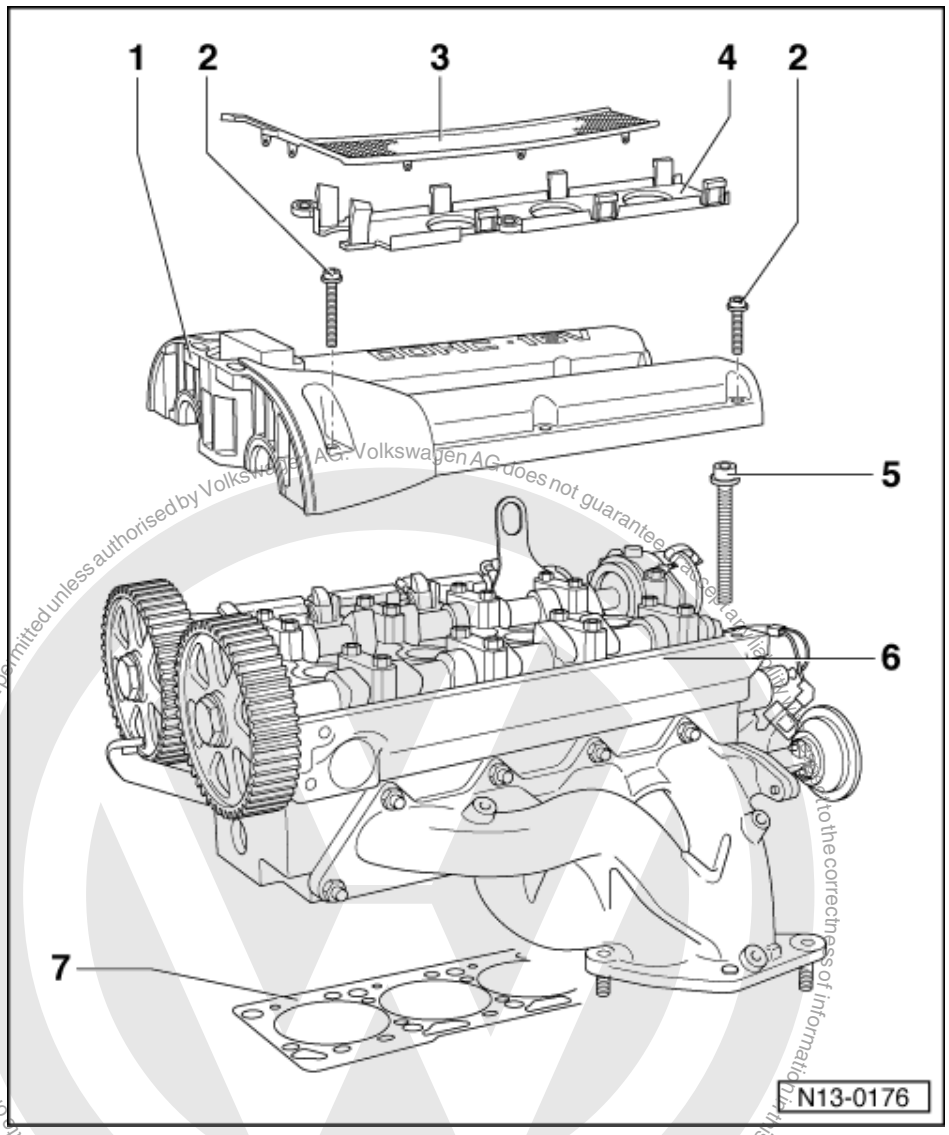

6 Cylinder head
- Removing and installing
  => Page 38
- If replaced renew the complete coolant

7 Cylinder head gasket
- Renew
- Metal gasket
- If replaced renew the complete coolant

satelettronica

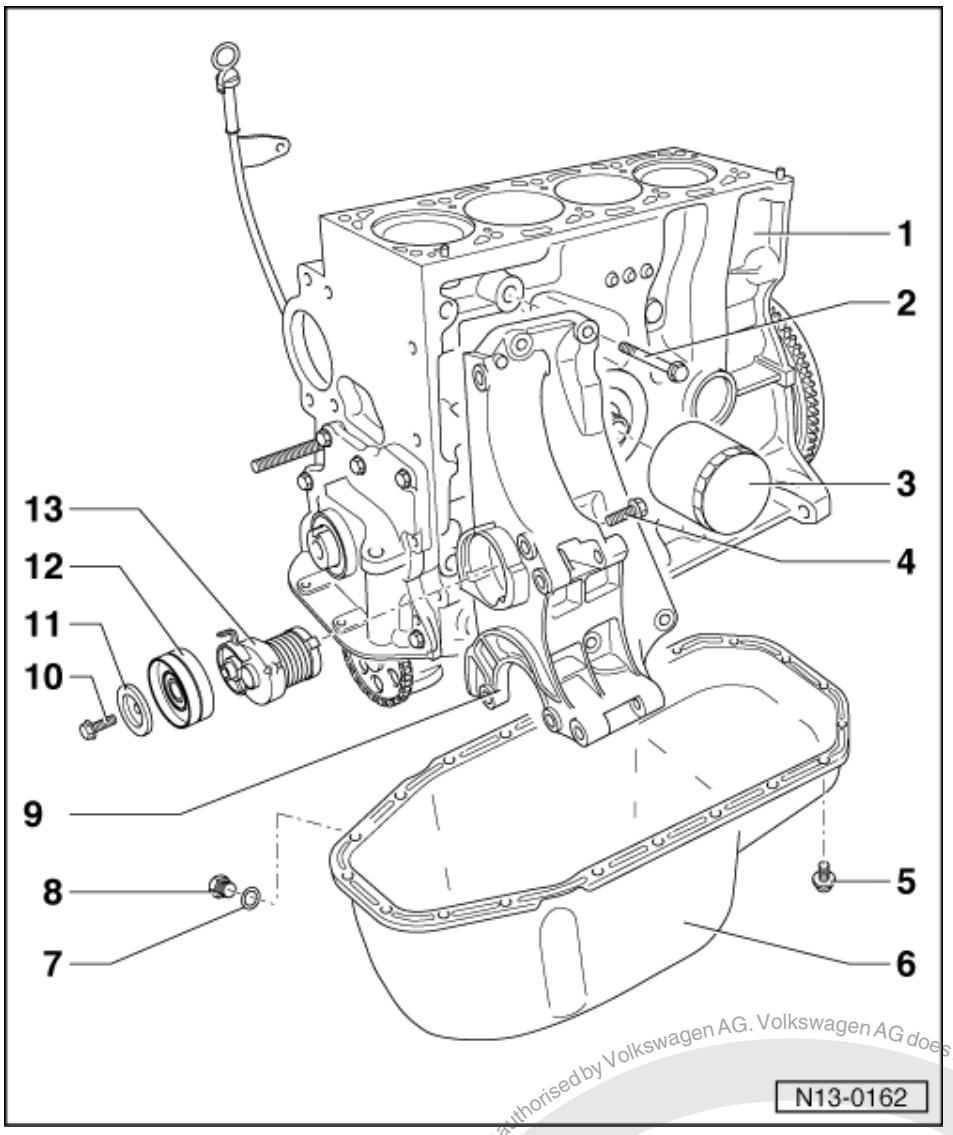

Part III

Note:

Servicing the clutch:

=> 5-Speed manual gearbox 085; Repair group 30; Servicing clutch Servicing clutch

1 Cylinder block
- Dismantling and assembling cylinder block, crankshaft and flywheel
  => Page 23
- Dismantling and assembling pistons and conrods
  => Page 30

2 45 Nm
- Tightening sequence:
  Upper right bolt first, then lower right bolt, and bolts on left last (as seen from direction of travel)

Protected by copyright. Copying for private or commercial purposes, in part or whole, is not permitted unless authorised by Volkswagen AG. Volkswagen AG does not guarantee or accept any liability with respect to the correctness of information in this document. Copyright by Volkswagen AG.
satelettronica

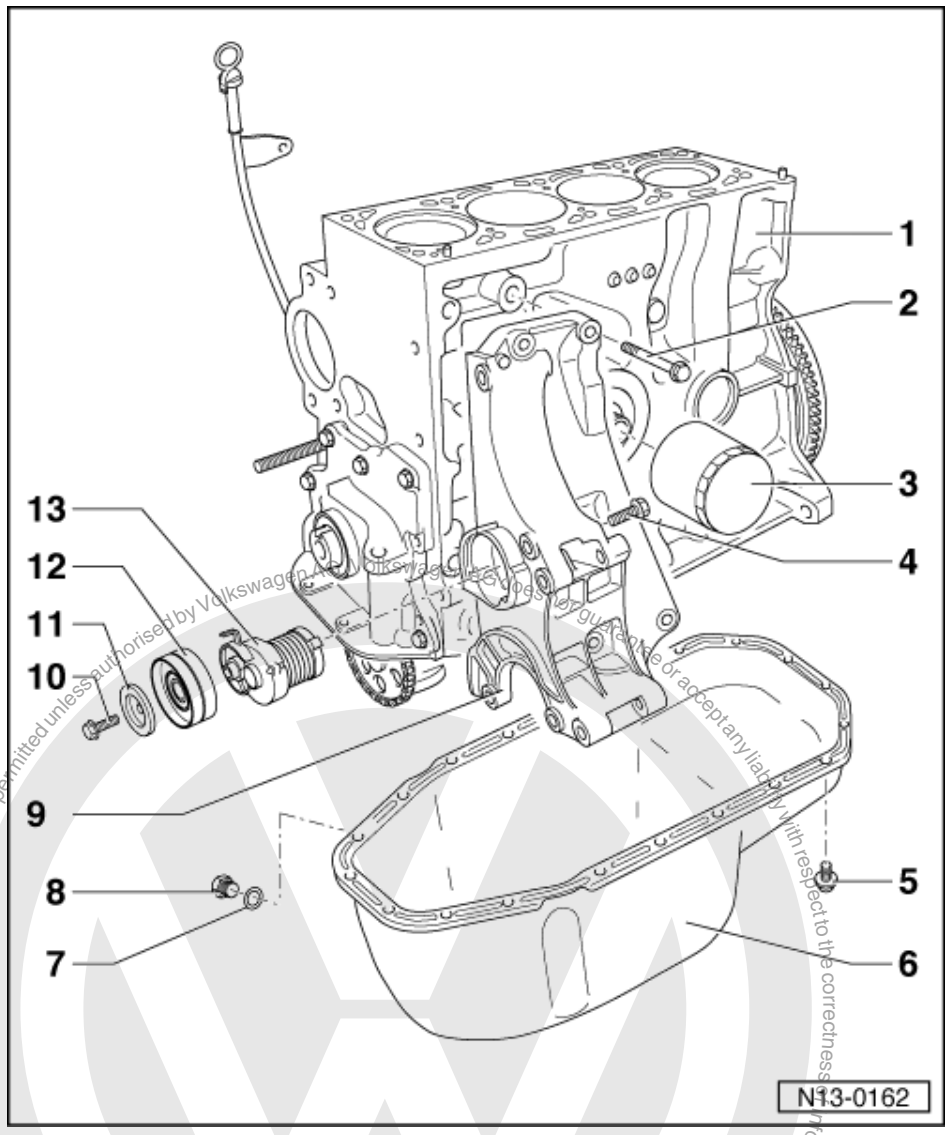

3 Oil filter
- Loosen on hexagon
- Tighten by hand
- Note instructions on filter when installing

4 20 Nm + 1/4 turn (90 °) further
- Renew

5 15 Nm
- Loosen and tighten the flywheel end bolts only with socket insert 3249

6 Sump
- Removing and installing
  => Page 67

7 Sealing ring
- Renew

8 Oil drain plug, 30 Nm

9 Bracket
- For vane pump and alternator

satelettronica

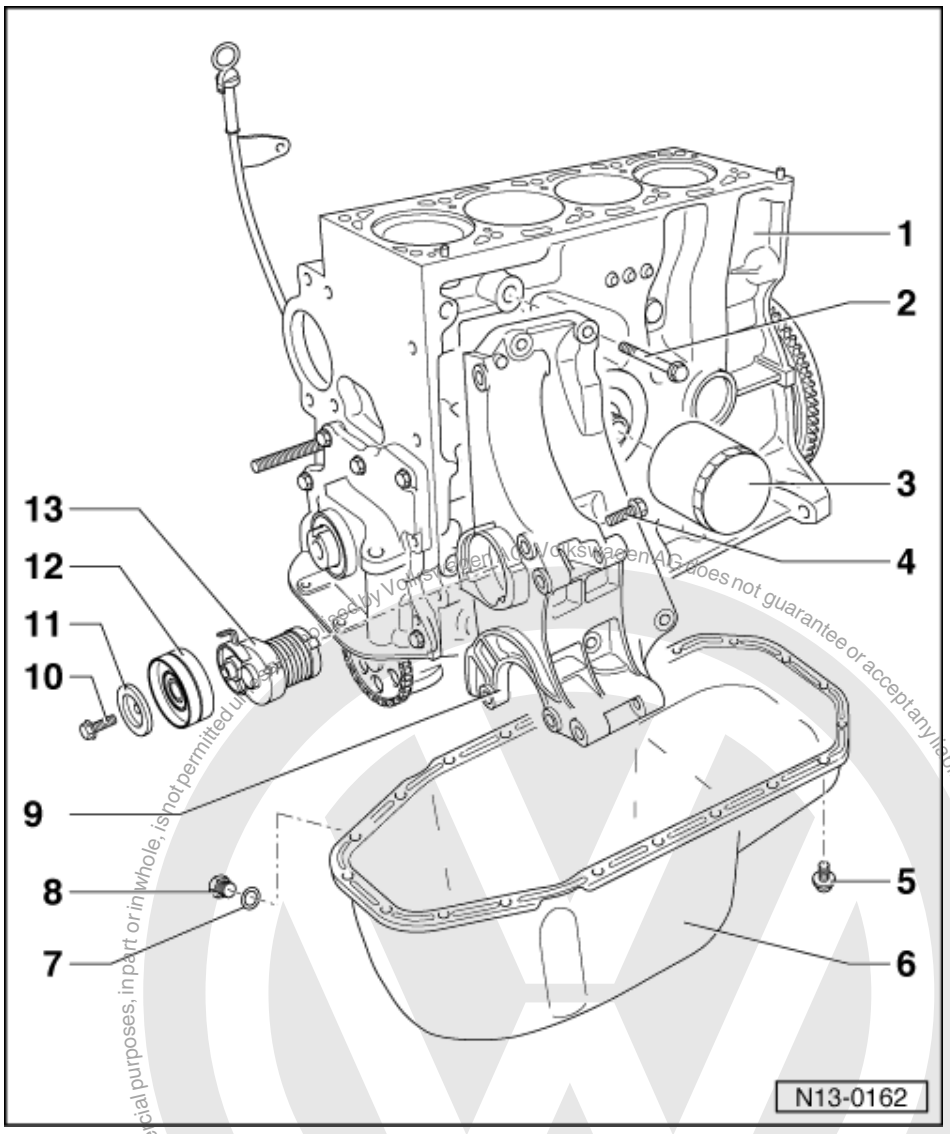

10 45 Nm
11 Washer
12 Tensioning roller
13 Tensioning element

Protected by copyright. Copying for private or commercial purposes, in part or in whole, is not permitted unless authorised by Volkswagen AG. Volkswagen AG does not guarantee or accept any liability with respect to the correctness of information in this document. Copyright by Volkswagen AG.
satelettronica

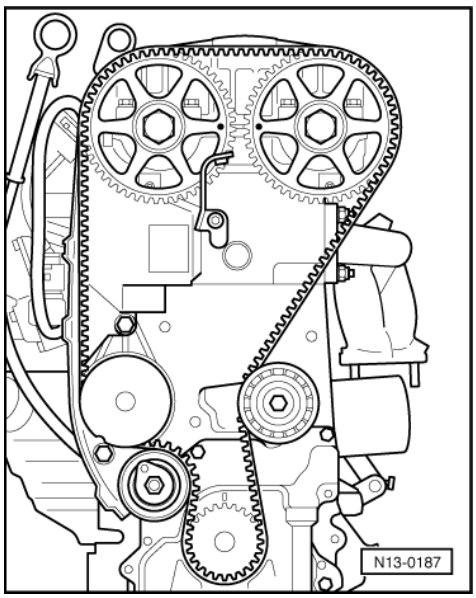

-> Fig. 1 Toothed belt routing

1.2 - Removing and installing ribbed belt

- Remove ribbed belt cover.
- Mark ribbed belt direction of rotation.

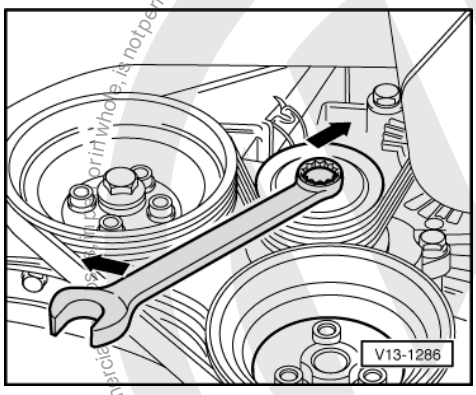

- -> Using a spanner on the securing bolt swivel tensioning roller in direction of arrow.
- Remove or fit the ribbed belt.

Note:

When installing the ribbed belt ensure that it sits correctly in the pulleys.

1.3 - Checking valve timing

- Remove the toothed belt guard upper part.

satelettronica

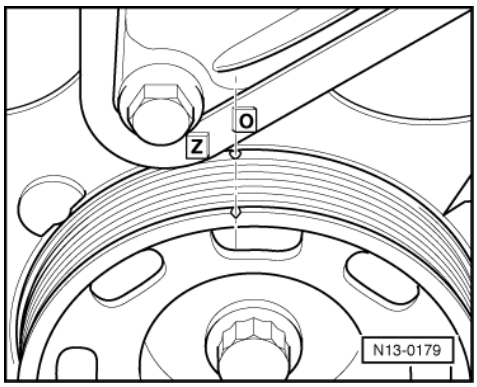

- -> Position the crankshaft to top dead centre No. 1 cylinder. The notch on the pulley must align with the edge of the -O- mark.

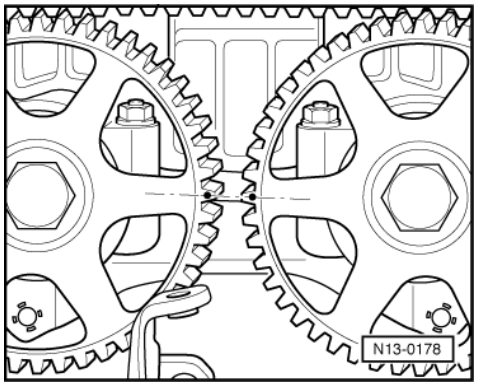

- -> Check position of the camshaft sprockets. The marks must align as shown.

Note:

If the marks are positioned to the outside, the crankshaft must be turned one revolution further.

1.4 - Removing and installing toothed belt

Special tools, workshop equipment, testers, measuring instruments and auxiliary items required

- Engine support bracket 10-222A with legs 10-222A/1
- Counter-hold tool 3415
- Torque wrench V.A.G 1331 (5...50 Nm)
- Torque wrench V.A.G 1332 (40...200 Nm)

Removing

- Remove air cleaner:

=> Repair group 24; Servicing injection; Dismantling and assembling air cleaner Servicing injection Dismantling and assembling air cleaner

Protected by copyright. Copying for private or commercial purposes, in part or in whole, is not permitted unless authorised by Volkswagen AG. Volkswagen AG does not guarantee or accept any liability with respect to the correctness of information in this document. Copyright by Volkswagen AG.
satelettronica

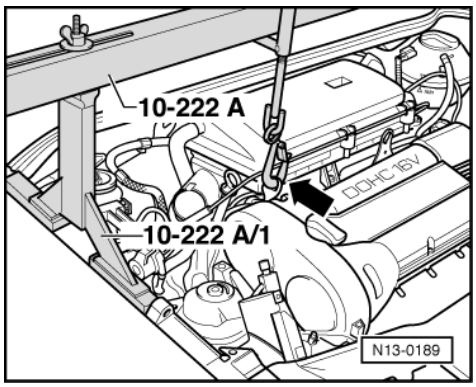

The engine must be lowered slightly as follows to enable the crankshaft sprocket to be removed:

- -> Fit support10-222A with legs 10-222A/1 as shown.
- Take-up weight of engine, and remove right engine mounting.
- Remove ribbed belt cover.
- Lower engine until the pulley securing bolt is accessible.
- Mark the direction of rotation of the ribbed belt and remove belt as follows.

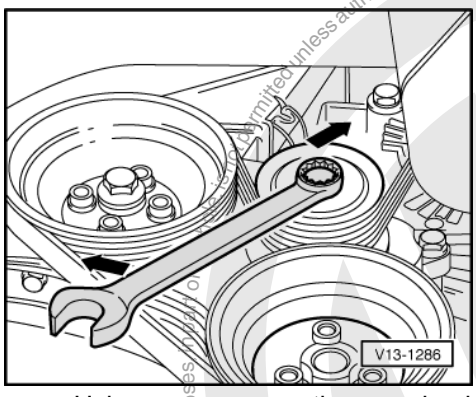

- -> Using a spanner on the securing bolt swivel tensioning roller in direction of arrow.
- Remove ribbed belt.

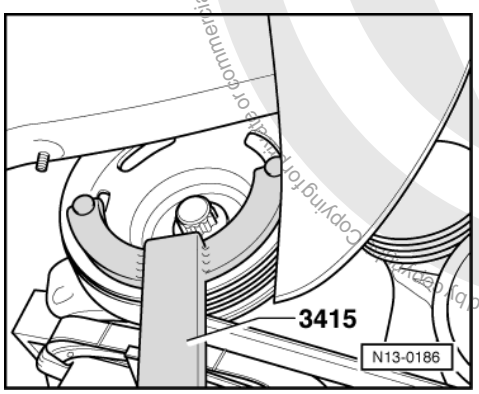

- -> Remove V-belt pulley and toothed belt sprocket securing bolt. to do this hold the pulley with counter-hold tool 3415.
- Remove pulley. Refit securing bolt with two washers and tighten to secure toothed belt sprocket.
- Remove toothed belt guard upper and lower parts.
- Mark D.O.R. of toothed belt.
- Release tensioner and take off toothed belt.

Note:

If the toothed belt is to be replaced, the console must also be removed.

Protected by copyright. Copying for private or commercial purposes, in part or in whole, is not permitted unless authorised by Volkswagen AG. Volkswagen AG does not guarantee or accept any liability with respect to the correctness of information in this document. Copyright by Volkswagen AG.
satelettronica

Installing

Prerequisites

- The crankshaft toothed belt sprocket is secured to the crankshaft with the securing bolt and two washers.
- The pistons must not be positioned at TDC.

Note:

If a piston is at TDC the valves could strike the piston when turning the camshafts.

Work sequence

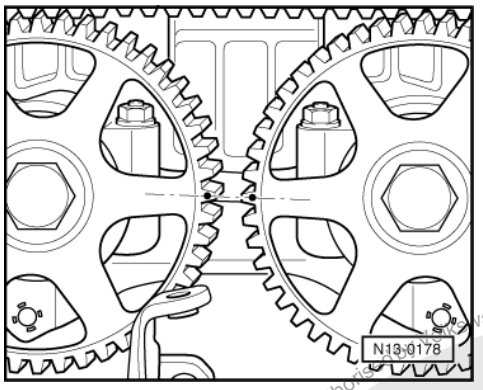

- -> Set the camshaft sprockets so that the marks line as shown.

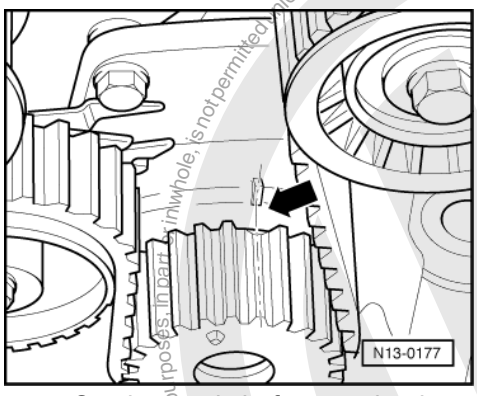

- -> Set the crankshaft to top dead centre No. 1 cylinder. The tooth with end ground down must align with the mark on the sealing flange.
- Fit toothed belt. For used belts note direction of rotation.

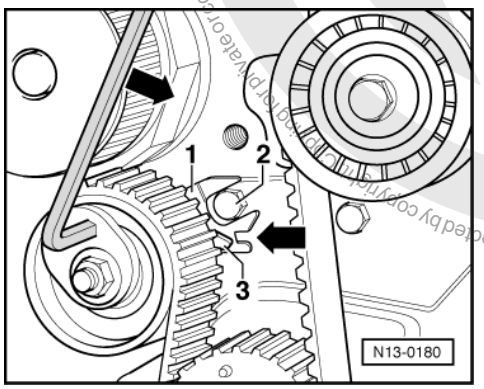

- -> Install tensioning roller and tighten securing nut hand-tight. The slot in the base plate -1- must engage over securing bolt -2- .
- Tension toothed belt by turning the tensioning roller in direction of arrow until the indicator -3- aligns with the groove in the base plate -arrow-.
- Tighten clamping nut on tensioning roller.

Protected by copyright. Copying for private or commercial purposes, in part or in whole, is not permitted unless authorised by Volkswagen AG. Volkswagen AG does not guarantee or accept any liability with respect to the correctness of information in this document. Copyright by Volkswagen AG.
satelettronica

Tightening torque: 20 Nm
- Now turn the crankshaft two turns in engine direction of rotation until it is again at top dead centre No. 1 cylinder.
- Now the position of the toothed belts and tensioning roller must be checked again.
- Refit toothed belt guard.
- Refit crankshaft belt pulley. When doing this note the following:
  - The pulley and toothed belt sprocket securing bolt must be renewed.
  - When installing the pulley observe the fixing arrangement to toothed belt sprocket.
  - Tightening procedure for the new oiled bolt: 90 Nm + 1/4 turn (90°) further.
- Refit right engine mounting with new bolts => Page 6 .
- Refit the ribbed belt and the cover.

Note:
When installing the ribbed belt ensure that it sits correctly in the pulleys.
- Check ignition timing:

=> Repair group 28; Injection and ignition system; Checking and adjusting ignition timing. Injection and ignition system Checking and adjusting ignition timing.

1.5 - Checking semi-automatic toothed belt tensioning roller

Special tools, testers and auxiliary items
- Engine support bracket 10-222A with legs 10-222A/1
- Counter-hold tool 3415
- Torque wrench V.A.G 1332 (40...200 Nm)
- Torque wrench V.A.G 1331 (5...50 Nm)

Test sequence
The engine must be lowered slightly as follows to enable the crankshaft sprocket to be removed:

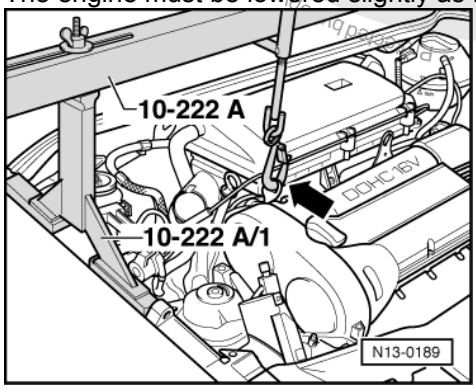

- -> Fit support10-222A with legs 10-222A/1 as shown.
- Take-up weight of engine, and remove right engine mounting.
- Remove ribbed belt cover.
- Lower engine until the pulley securing bolt is accessible.
- Mark ribbed belt direction of rotation.

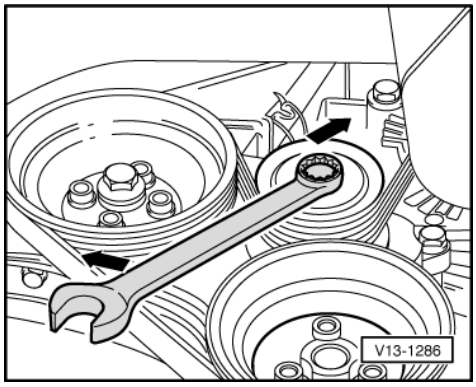

satelettronica

- -> Using a spanner on the securing bolt swivel tensioning roller in direction of arrow.
- Remove ribbed belt.

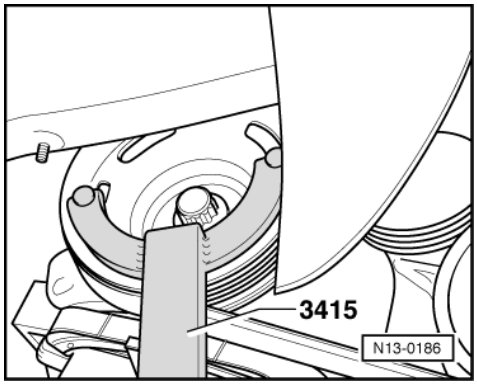

- -> Remove the pulley and toothed belt sprocket securing bolt. To do this hold the pulley with counter-hold tool 3415.
- Remove pulley. Refit securing bolt with two washers and tighten to secure toothed belt sprocket.
- Remove toothed belt guard upper and lower parts.
- Now turn the crankshaft two turns in engine direction of rotation until it is again at top dead centre No. 1 cylinder.

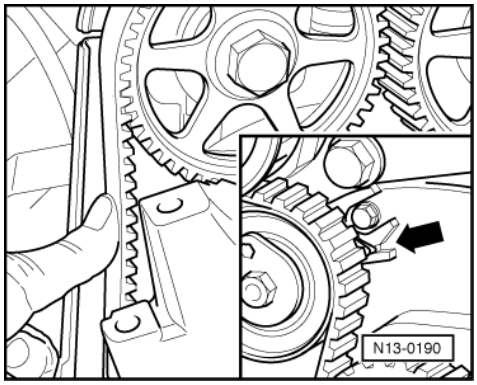

- -> Note the position of the tensioning roller indicator -arrow-. Press the toothed belt with firm thumb pressure. The indicator must move.
- Release tension on toothed belt.
- Turn crankshaft two turns in engine direction of rotation.
- Then check the position of the indicator. It must have return to its original position.

If tensioning roller does not return to initial position:

- Replace tensioning roller.

If the tensioning roller is OK:

- Refit toothed belt guard.
- Refit crankshaft belt pulley. When doing this note the following:
  - The pulley and toothed belt sprocket securing bolt must be renewed.
  - When installing the pulley observe the fixing arrangement to toothed belt sprocket.
  - Tightening procedure for the new oiled bolt: 90 Nm + 1/4 turn (90°) further.
- Refit right engine mounting with new bolts => Page 6 .
- Refit the ribbed belt and the cover.

Note:

When installing the ribbed belt ensure that it sits correctly in the pulleys.

Protected by copyright. Copying for private or commercial purposes, in part or in whole, is not permitted unless authorised by Volkswagen AG. Volkswagen AG does not guarantee or accept any liability with respect to the correctness of information in this document. Copyright by Volkswagen AG.
satelettronica

2 - Dismantling and assembling cylinder block, crankshaft and flywheel

2.1 - Dismantling and assembling cylinder block, crankshaft and flywheel

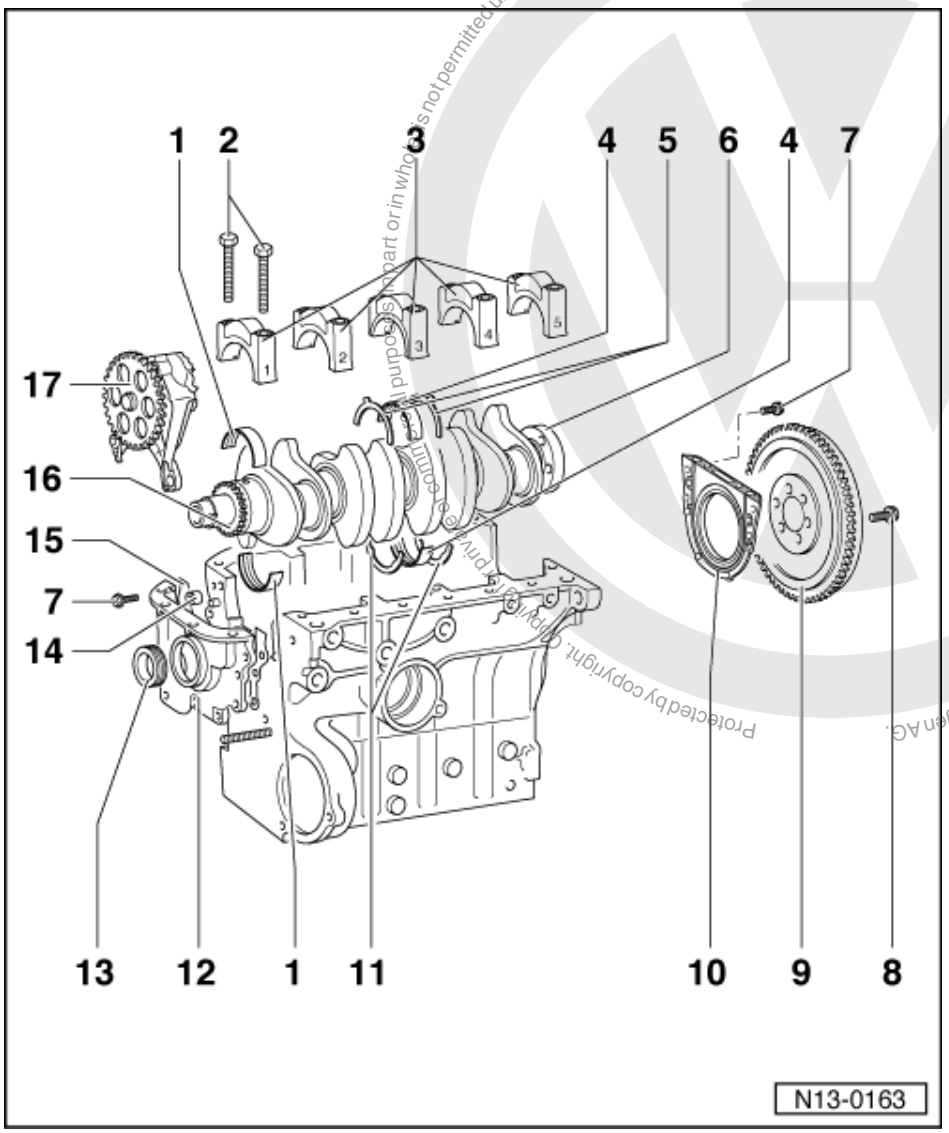

1 Bearing shells 1, 2, 4 and 5
- Do not interchange used bearing shells (mark)

2 65 Nm

3 Bearing cap
- Bearing cap 1: Pulley end
- Bearing cap 3 with recesses for thrust washers
- Bearing shell retaining lugs (cylinder block/bearing cap) must be on the same side

4 Bearing shell 3

Volkswagen AG. Volkswagen AG does not guarantee or accept any liability with respect to the correctness of information in this document. Copyright by Volkswagen AG.
Protected by copyright. Copying for private or commercial purposes, in part or in whole, is not permitted unless authorised by Volkswagen AG.
satelettronica

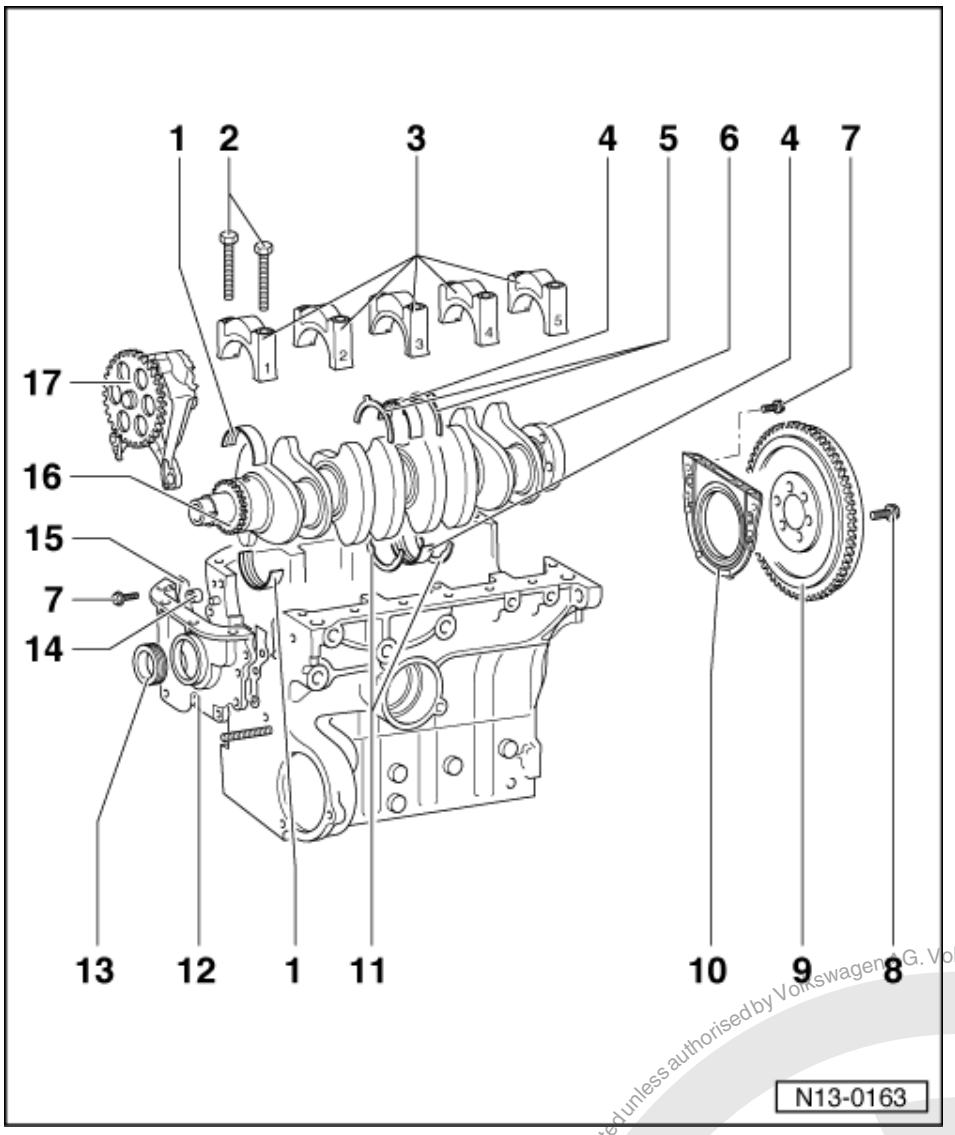

5 Thrust washer
- For bearing cap 3
- Note fixing arrangement

6 Crankshaft
- Axial clearance new: 0.07...0.18 mm
  Wear limit: 0.20 mm
- Check radial clearance with Plastigage
  New: 0.03...0.08 mm
  Wear limit: 0.17 mm
- Do not rotate the crankshaft when checking the radial clearance
- Crankshaft dimensions
  => Page 29

7 10 Nm
- 8 Nm for vehicles with Duo-centric oil pump

8 60 Nm + 1/4 turn (90 °) further
- Renewing

9 Flywheel
- To remove and install counter-hold with 10-201

Protected by copyright. Copying for private or commercial purpose, in part or in whole, is not permitted unless authorised by Volkswagen AG. Volkswagen AG does not guarantee or accept any liability with respect to the correctness of information in this document. Copyright by Volkswagen AG.
satelettronica

Protected by copyright. Copyright by Volkswagen AG. Volkswagen AG does not guarantee or accept any liability with respect to the correctness of information in this document. Copyright by Volkswagen AG. Reproduced for non-commercial purposes only, unless authorised by Volkswagen AG, is not permitted unless authorised by Volkswagen AG.

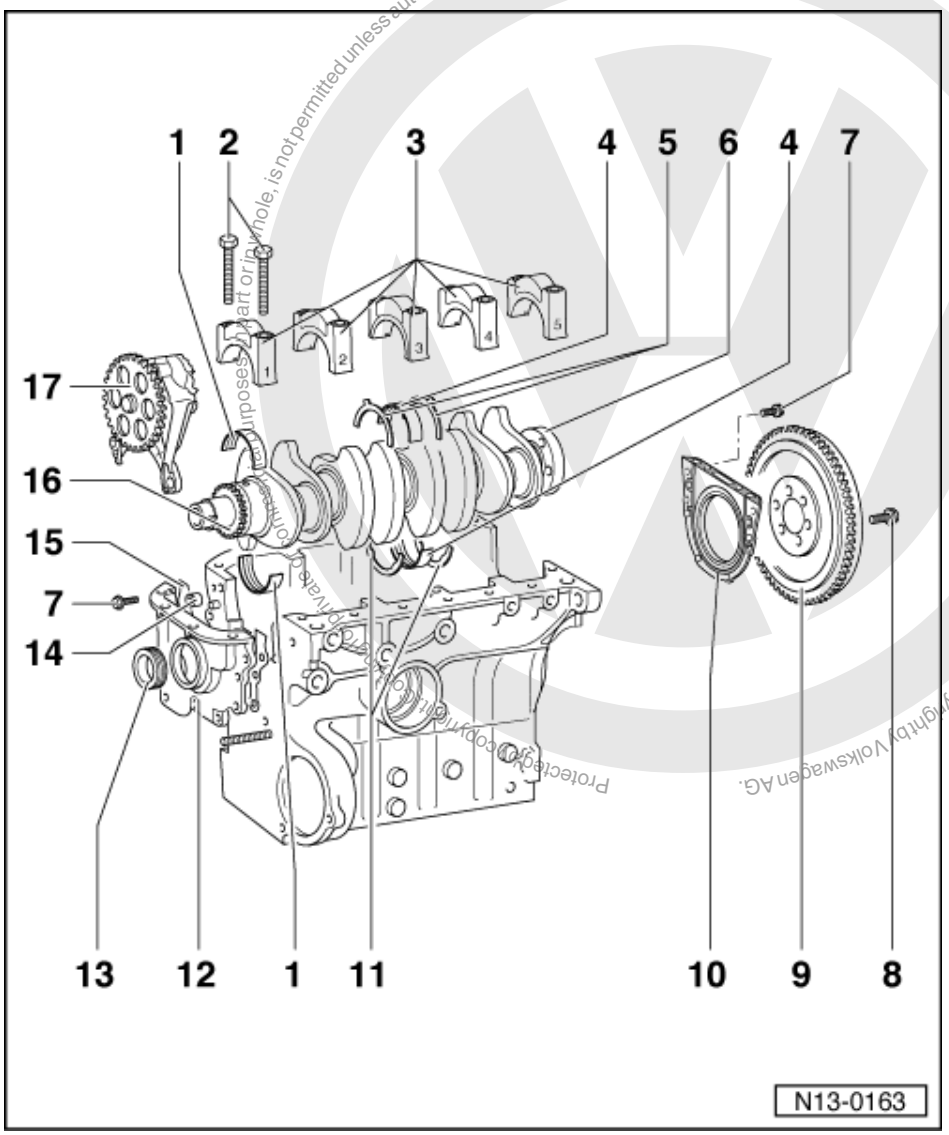

10 Sealing flange with oil seal

- Only renew complete
- For spare part sealing flange, do not additionally oil sealing lip
- The sealing flange replacement part does not have an integral gasket and must be installed with a normal gasket.
- Fit spare part sealing flange with supplied sleeve

11 Thrust washer

- For cylinder block, bearing 3

12 Sealing flange/Duo-centric oil pump

- Removing and installing Duo-centric oil pump => Page 69

13 Oil seal

- Renewing => Page 26

14 Sealing bush

- Only oil pump driven by chain
- Renew if damaged
- Insert in sealing flange first
- Oil to install

satelettronica

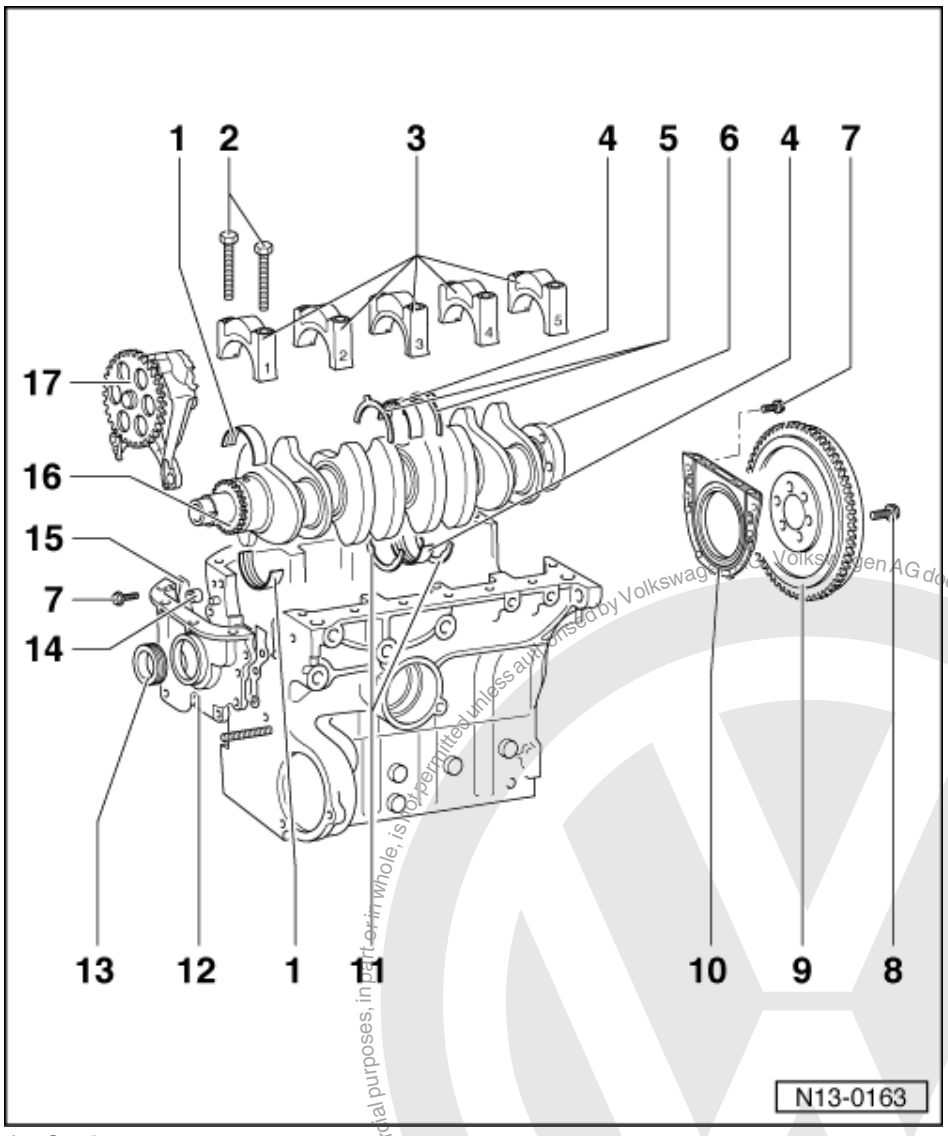

15 Gasket
- Renew

16 Chain sprocket
- For oil pump drive

17 Oil pump
- Removing and installing => Page 60
- Removing and installing for vehicles with Duo-centric oil pump => Page 69

2.2 - Renewing crankshaft oil seal - pulley end -

Vehicles with oil pump driven by chain and vehicles with Duo-centric oil pump => Page 28

Special tools, workshop equipment, testers, measuring instruments and auxiliary items required

- Engine support bracket 10-222A with legs 10-222A/1
- 3415 or 3099 Counter-hold tool
- 2085 Oil seal extractor
- 3083 Oil seal fitting tool
- V.A.G 1331 (5...50 Nm) Torque wrench

Protected by copyright. Copying for private or commercial purposes, in part or in whole, is not permitted unless authorised by Volkswagen AG. Volkswagen AG does not guarantee or accept any liability with respect to the correctness of information in this document. Copyright by Volkswagen AG.
satelettronica

- V.A.G 1332 (40...200 Nm) Torque wrench

Removing

- First remove toothed belt
  => Page 18 .
- Then remove the crankshaft toothed belt sprocket.
- To guide oil seal extractor screw crankshaft sprocket securing bolt into crankshaft onto stop.
- Unscrew inner part of the oil seal extractor 2085 two turns (approx. 3 mm) out of the outer part and lock with knurled screw.

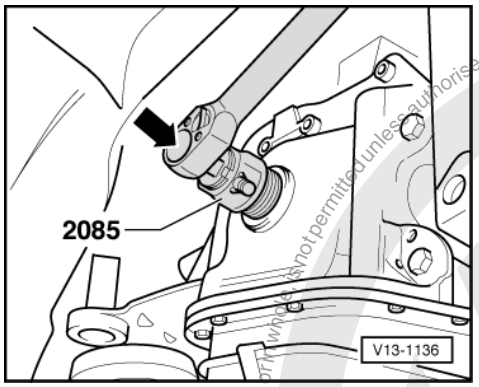

- -> Lubricate threaded head of oil seal extractor, place it in position and exerting firm pressure screw it as far as possible into oil seal.
- Loosen knurled screw and turn inner part against crankshaft until the oil seal is pulled out.

Installing

- Lightly oil sealing lip of oil seal.

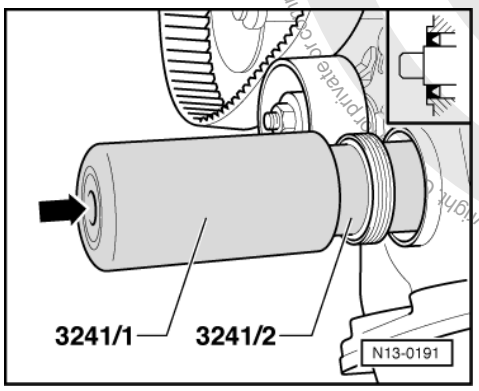

- -> Place guide sleeve 3241/2 onto crankshaft journal.
- Slide oil seal over the guide sleeve.
- Carefully drive oil seal in flush with press sleeve 3241/1.
- Refit crankshaft toothed belt sprocket. The bolt need only be lightly tightened, as it must be removed again to fit the pulley.
- Install toothed belt => Page 18 .

Protected by copyright. Copyright by Volkswagen AG.
For private or commercial purposes, in part or in whole, is not permitted unless authorised by Volkswagen AG. Volkswagen AG does not guarantee or accept any liability with respect to the correctness of information in this document.
satelettronica

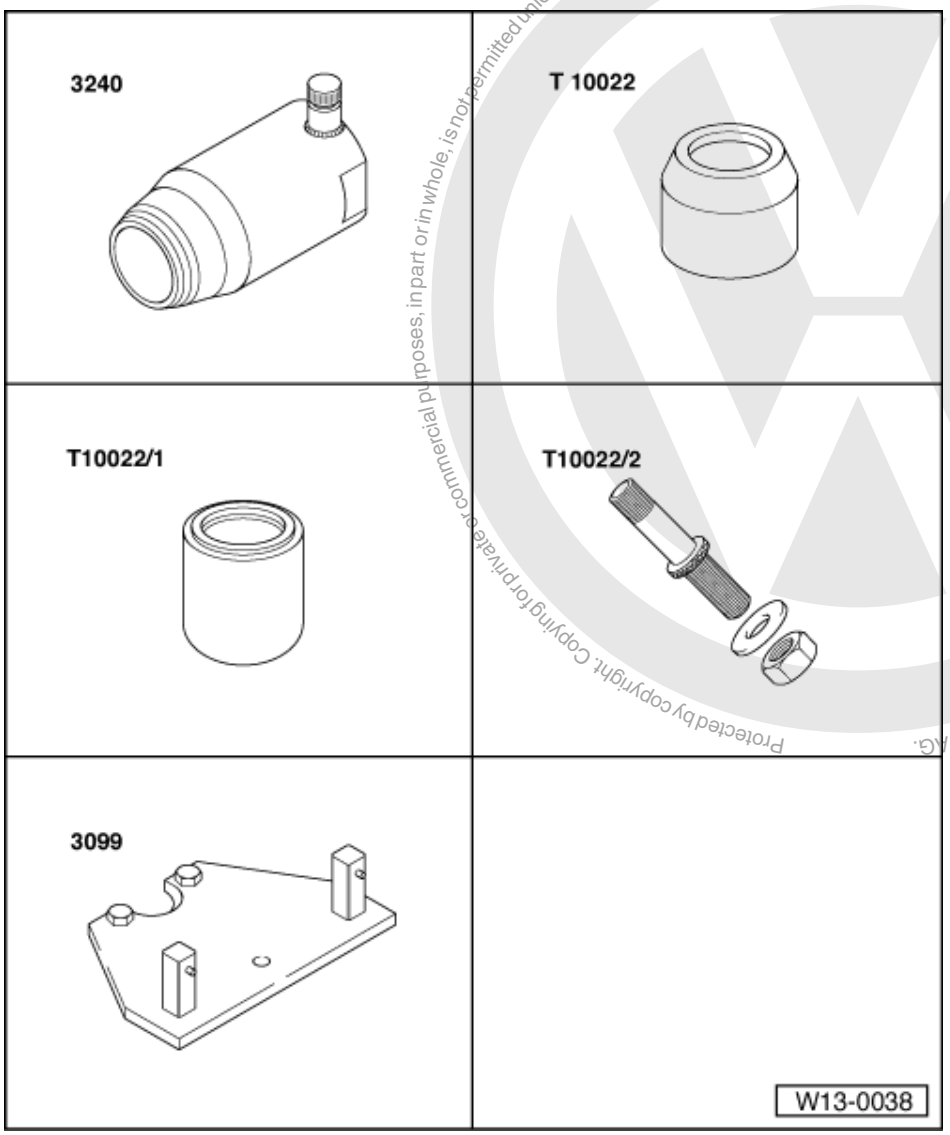

Vehicles with Duo-centric oil pump

Special tools, workshop equipment, test and measuring appliances and aux. items required

- 3240 Oil seal extractor
- T10022 Sleeve
- T10022/1 Press piece
- T10022/2 Spindle
- 3099 Counter-hold tool

Removing

- First remove toothed belt
  => Page 18 .
- Then remove the crankshaft toothed belt sprocket.
- To guide oil seal extractor screw crankshaft sprocket securing bolt into crankshaft onto stop.
- Unscrew inner part of oil seal extractor 3240 two turns (approx. 3 mm) out of the outer part and lock with knurled screw.

Protected by copyright. Copying for private or commercial purposes, in part or in whole, is not permitted unless authorised by Volkswagen AG. Volkswagen AG does not guarantee or accept any liability with respect to the correctness of information in this document. Copyright by Volkswagen AG.
satelettronica

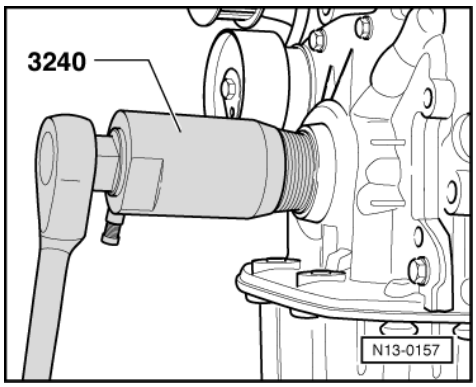

- -> Lubricate threaded head of oil seal extractor, place it in position and exerting firm pressure screw it as far as possible into oil seal.
- Loosen knurled screw and turn inner part against crankshaft until the oil seal is pulled out.

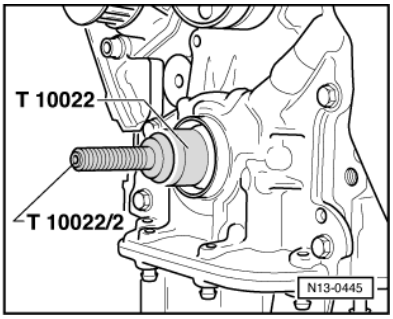

Installing

- Lightly oil sealing lip of oil seal.
- -> Fit sleeve T10022 onto crankshaft journal and turn spindle T10022/2 in onto stop.
- Slide oil seal over sleeve T10022.

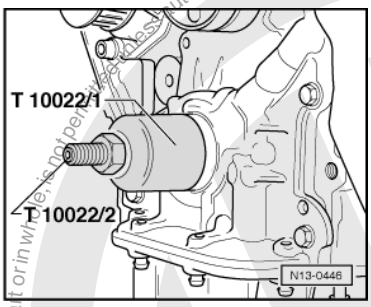

- -> Press in oil seal onto stop with press piece T10022/1.
- Refit crankshaft toothed belt sprocket. The bolt need only be lightly tightened, as it must be removed again to fit the pulley.
- Install toothed belt => Page 18 .

2.3 - Crankshaft dimensions

Honing dimension in mm	Crankshaft main journal ø	Conrod journal ø
Basic dimension	-0.017 54.00 -0.032	-0.022 47.80 -0.037
1st undersize	-0.017 53.75 -0.032	-0.022 47.55 -0.037

Protected by copyright. Copyright by Volkswagen AG. Volkswagen AG does not guarantee or accept any liability with respect to the correctness of information in this document. Copyright by Volkswagen AG. Volkswagen AG. Volkswagen AG does not guarantee or accept any liability with respect to the correctness of information in this document. Copyright by Volkswagen AG. Volkswagen AG. Volkswagen AG does not guarantee or accept any liability with respect to the correctness of information in this document. Copyright by Volkswagen AG. Volkswagen AG. Volkswagen AG does not guarantee or accept any liability with respect to the correctness of information in this document. Copyright by Volkswagen AG.
satelettronica

Honing dimension in mm	Crankshaft main journal ø	Conrod journal ø
2nd undersize	-0.017 53.50 -0.032	-0.022 47.30 -0.037
3rd undersize	-0.017 53.25 -0.032	-0.022 47.05 -0.037

3 - Dismantling and assembling pistons and conrods

3.1 - Dismantling and assembling pistons and conrods

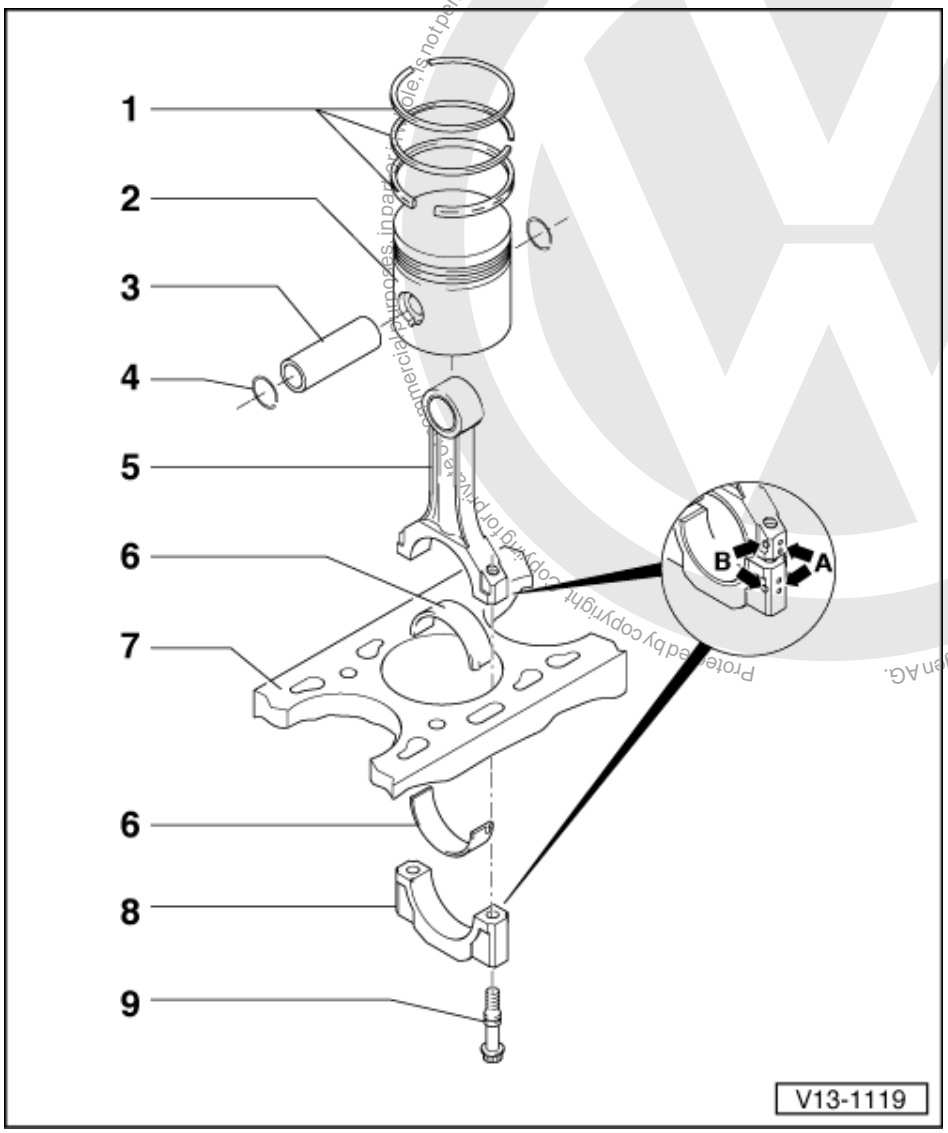

1 Piston ring
- Offset gaps by 120 °
- Remove and install with piston ring pliers
- "TOP" faces towards piston crown
- Checking ring gap=> Fig. 1
- Checking ring to groove clearance => Fig. 2

2 Piston
- Checking => Fig. 3

Protected by copyright. Copyright by Volkswagen AG. Volkswagen AG does not guarantee or accept any liability with respect to the correctness of information in this document. Copyright by Volkswagen AG.
satelettronica

- Mark installation position and cylinder number
- Arrow on piston crown points to pulley end
- Install using piston ring clamp

3 Piston pin

- If difficult to remove, heat piston to 60 °C
- Remove and install with10-206

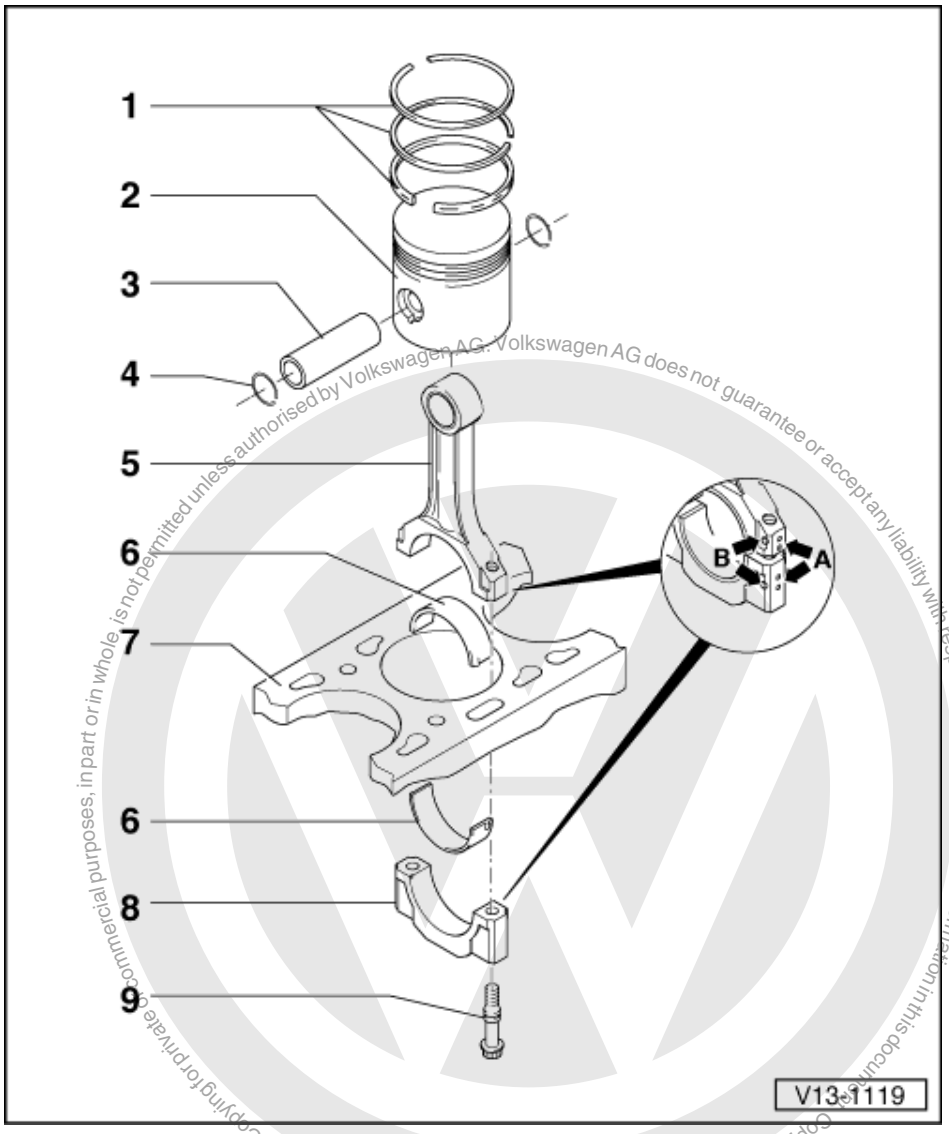

4 Circlip

5 Conrod

- Only renew as a set
- Mark cylinder number -A-
- Installation position:
  Marking -B- faces towards pulley end
- Guided axially via piston

6 Bearing shell

- Note installation position
- Do not interchange used bearing shells
- Ensure retaining lugs fit tightly in recesses, to ensure this measure pre-tension =>Fig. 5
- Check radial clearance with Plastigage:
  New: 0.006...0.047 mm
  Wear limit: 0.091 mm

Protected by copyright. Copyright for private or commercial purposes, in part or in whole, is not permitted unless authorised by Volkswagen AG. Volkswagen AG does not guarantee or accept any liability with respect to the correctness of information in this document. Copyright by Volkswagen AG.
satelettronica

Do not rotate crankshaft when checking radial clearance

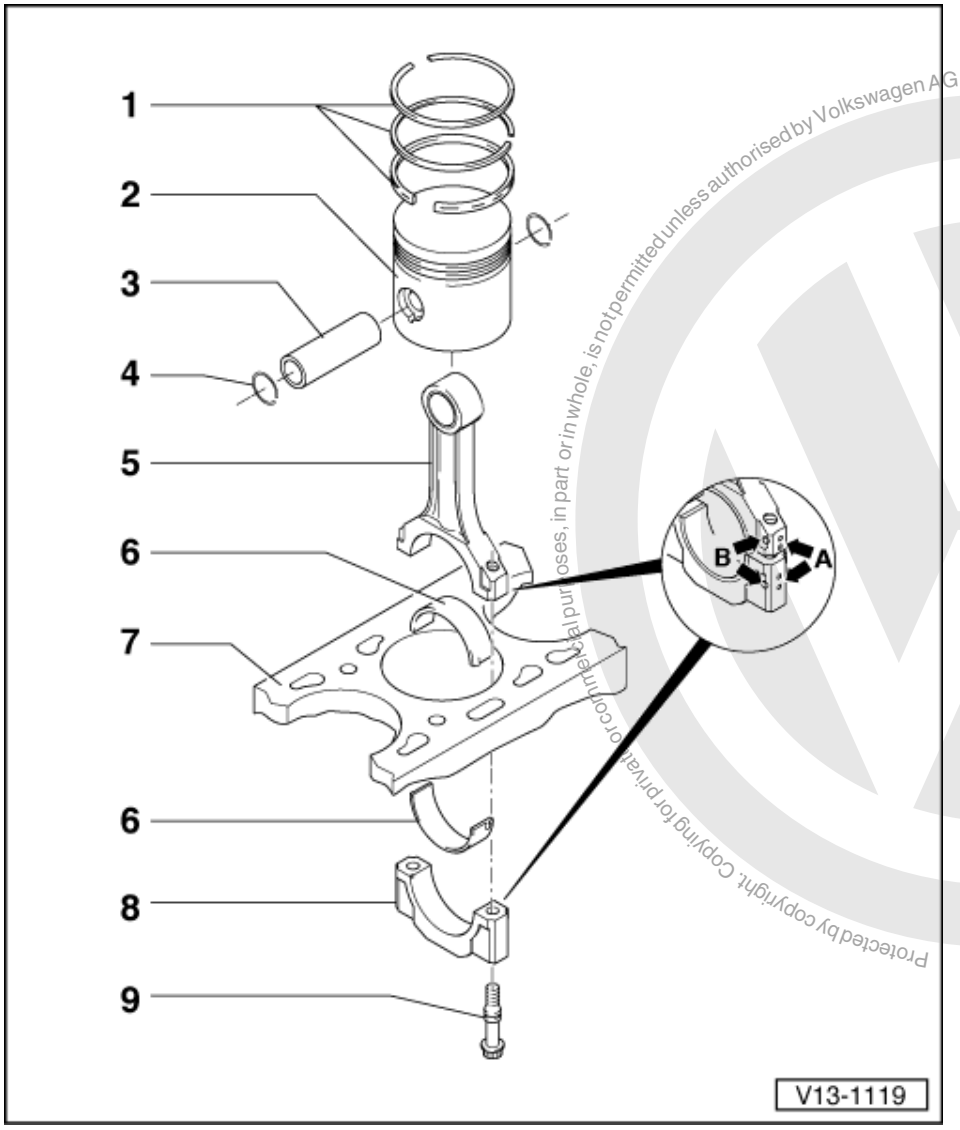

Protected by copyright. Copying for private or commercial purposes, in part or in whole, is not permitted unless authorised by Volkswagen AG. Volkswagen AG does not guarantee or accept any liability with respect to the correctness of information in this document. Copyright by Volkswagen AG.
satelettronica

7 Cylinder block
- Checking cylinder bores
  =>Fig. 4
- Piston and cylinder dimensions
  =>Page 35

8 Conrod bearing cap
- Note installation position

9 Conrod bolt, 30 Nm + 1/4 turn (90 °) further
- Renewing
- Oil threads and contact surface
- To measure radial clearance tighten to 30 Nm but not further

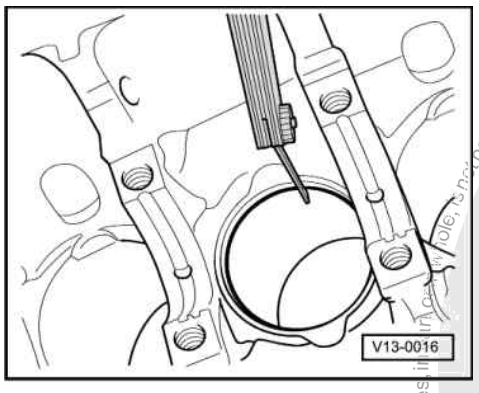

-> Fig. 1 Checking piston ring gap

- Push ring squarely from above down to approx. 15 mm from bottom end of cylinder.

Piston ring Dimensions in mm	New	Wear limit
1. Compression ring	0.20...0.50	1.0
2. Compression ring	0.40...0.70	1.0
Oil scraper ring	0.40...1.40	---1)

1) No wear limit details

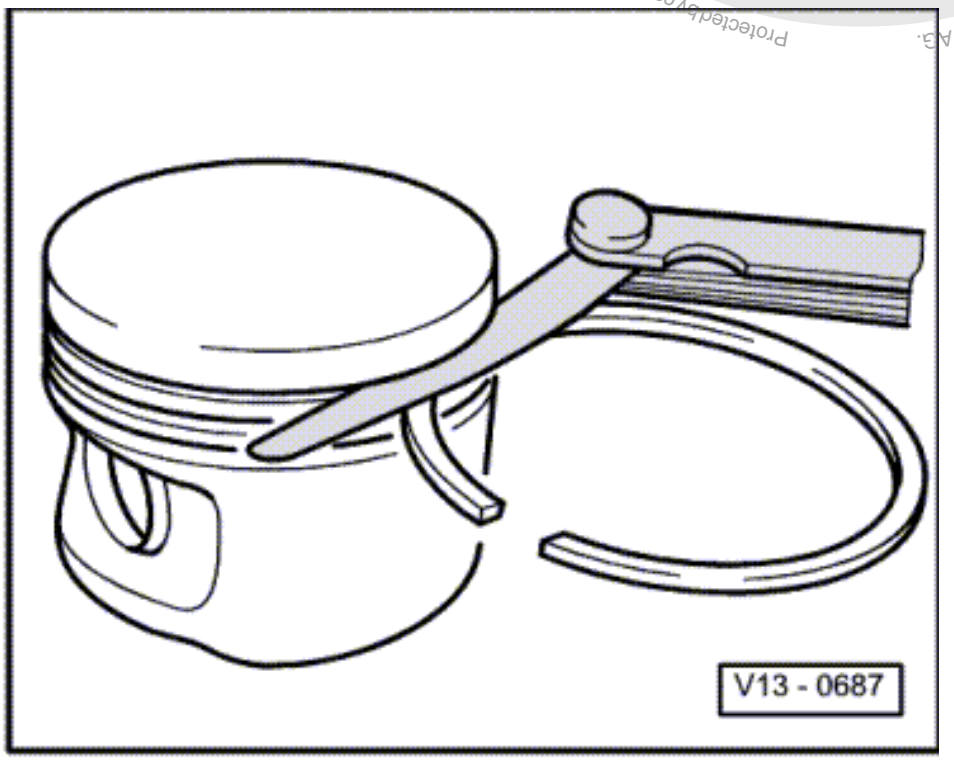

-> Fig. 2 Checking ring to groove clearance

Clean groove before check.

Piston ring Dimensions in mm	New	Wear limit
1. Compression ring	0.04...0.08	0.15

Protected by copyright. Copying for private or commercial purposes, in part or in whole, is not permitted unless authorised by Volkswagen AG. Volkswagen AG does not guarantee or accept any liability with respect to the correctness of information in this document. Copyright by Volkswagen AG.
satelettronica

Piston ring Dimensions in mm	New	Wear limit
2. Compression ring	0.04...0.08	0.15
Oil scraper ring	Cannot be measured	

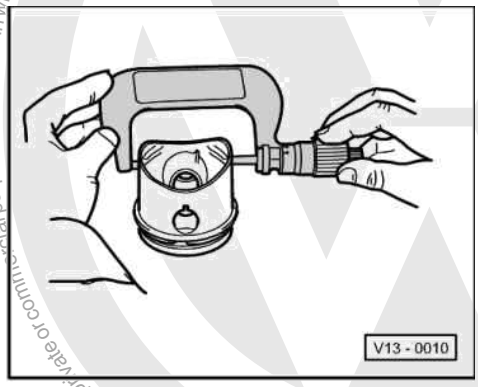

-> Fig. 3 Checking piston

Special tools, testers and auxiliary items

- Micrometer 75...100 mm

- Approx. 10 mm from lower edge and offset 90 ° to piston pin axis. Deviations from nominal dimensions max. 0.04 mm

  Nominal dimension => Page 35 ; Piston and cylinder dimensions

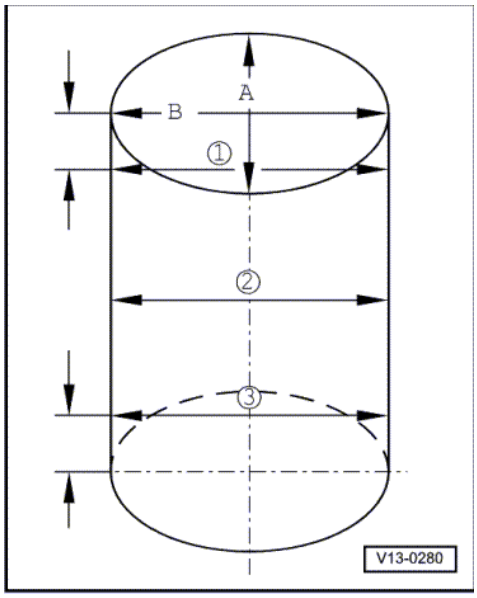

-> Fig. 4 Checking cylinder bores

Special tools, testers and auxiliary items

- Internal dial gauge 50...100 mm

- Take measurements at 3 positions in both lateral -A- and longitudinal -B- directions, as illustrated. Deviation from nominal dimension

Protected by copyright. Copying for private or commercial purposes, in part or in whole, is not permitted unless authorised by Volkswagen AG. Volkswagen AG does not guarantee or accept any liability with respect to the correctness of information in this document. Copyright by Volkswagen AG.
satelettronica

max. 0.08 mm

Nominal dimension => Page 35 ; Piston and cylinder dimensions

Note:

Measuring the cylinder bores must not be done when the cylinder block is mounted on a repair stand with adapter bracket VW 540, as incorrect measurements would then be possible.

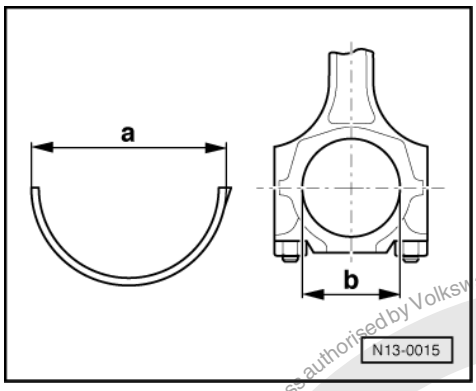

-> Fig. 5 Measuring bearing shell pretension

Special tools, testers and auxiliary items

- Vernier caliper

The bearing shell pretension is calculated as follows:

Bearing shell dimension -a-
- Conrod diameter -b-
= Pretension

Minimum dimension: 1.5 mm

If the pretension is not achieved:

- Renew bearing shells.

3.2 - Piston and cylinder dimensions

Honing dimension		Piston-ø	Cylinder bore-ø
Basic dimen.	mm	76.485	76.51
1st oversize	mm	76.735	76.76
2nd oversize	mm	76.985	77.01
3rd oversize	mm	77.235	77.26

Copyright by Volkswagen AG. Volkswagen AG does not guarantee or accept any liability with respect to the correctness of information in this document. Copyright by Volkswagen AG. Protected by copyright. Copying for private or commercial purposes, in whole or in part, is not permitted unless authorised by Volkswagen AG.
satelettronica

15 - Cylinder head, Valve gear

1 - Removing and installing cylinder head

1.1 - Removing and installing cylinder head

Checking compressions=> Page 41

Notes:

- When installing an exchange cylinder head with fitted camshaft, the contact surfaces between the bucket tappets and the cam must be oiled before installing the cylinder head cover.
- The plastic packing pieces for protecting the open valves must not be removed until immediately before fitting cylinder head.
- If the cylinder head is replaced, all the coolant in the system must also be renewed.

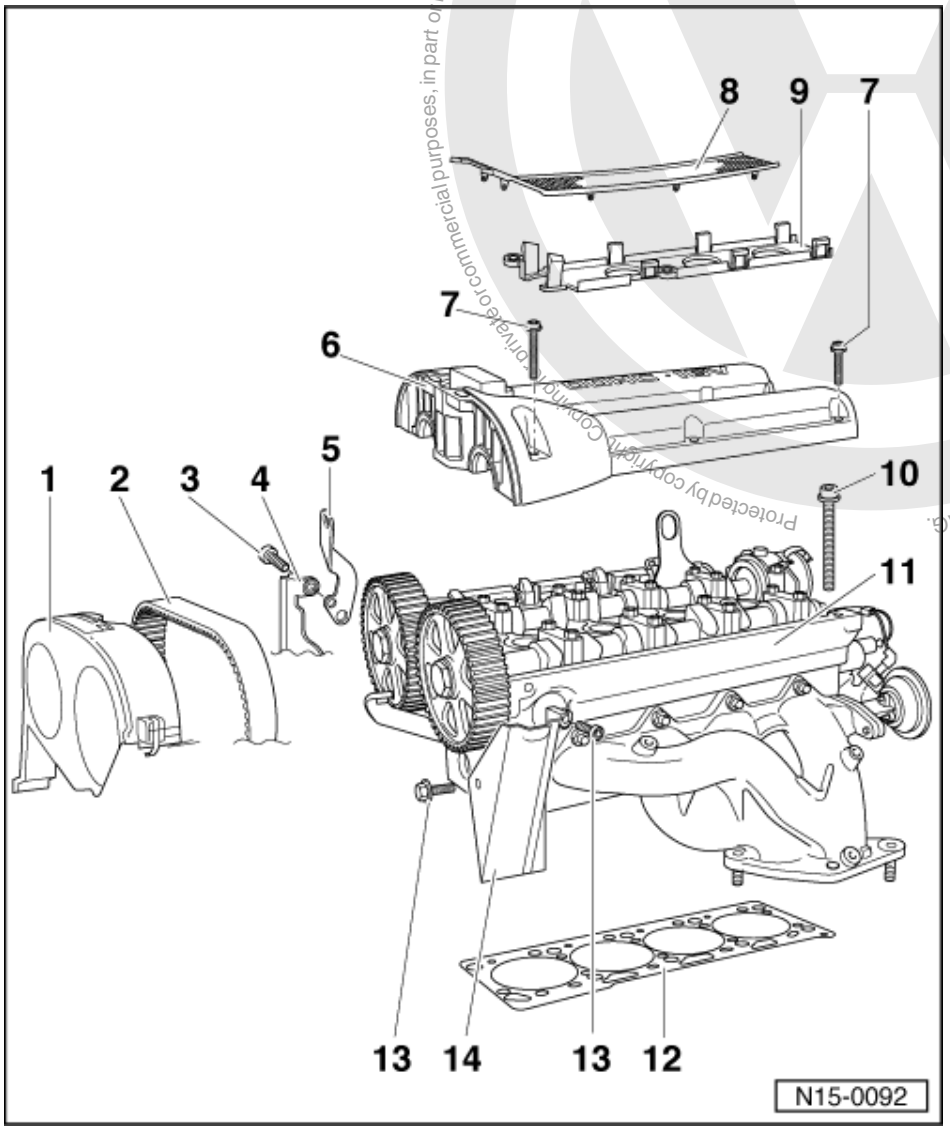

1 Toothed belt guard - upper part
2 Toothed belt
- Check for wear
- Do not kink

Protected by copyright. Copying for private or commercial purposes, in part or in whole, is not permitted unless authorised by Volkswagen AG. Volkswagen AG does not guarantee or accept any liability with respect to the correctness of information in this document. Copyright by Volkswagen AG.
satelettronica

- Removing and installing
  => Page 18

3 20 Nm

4 Rear toothed belt guard

5 Lifting eye

6 Cylinder head cover

- Before fitting gasket coat transition between bearing cap/cylinder head and the half moon shaped recesses with D 454 300 A3

7 10 Nm

- Tighten from centre outwards

8 HT cable cover

9 Retainer

- For HT cable cover

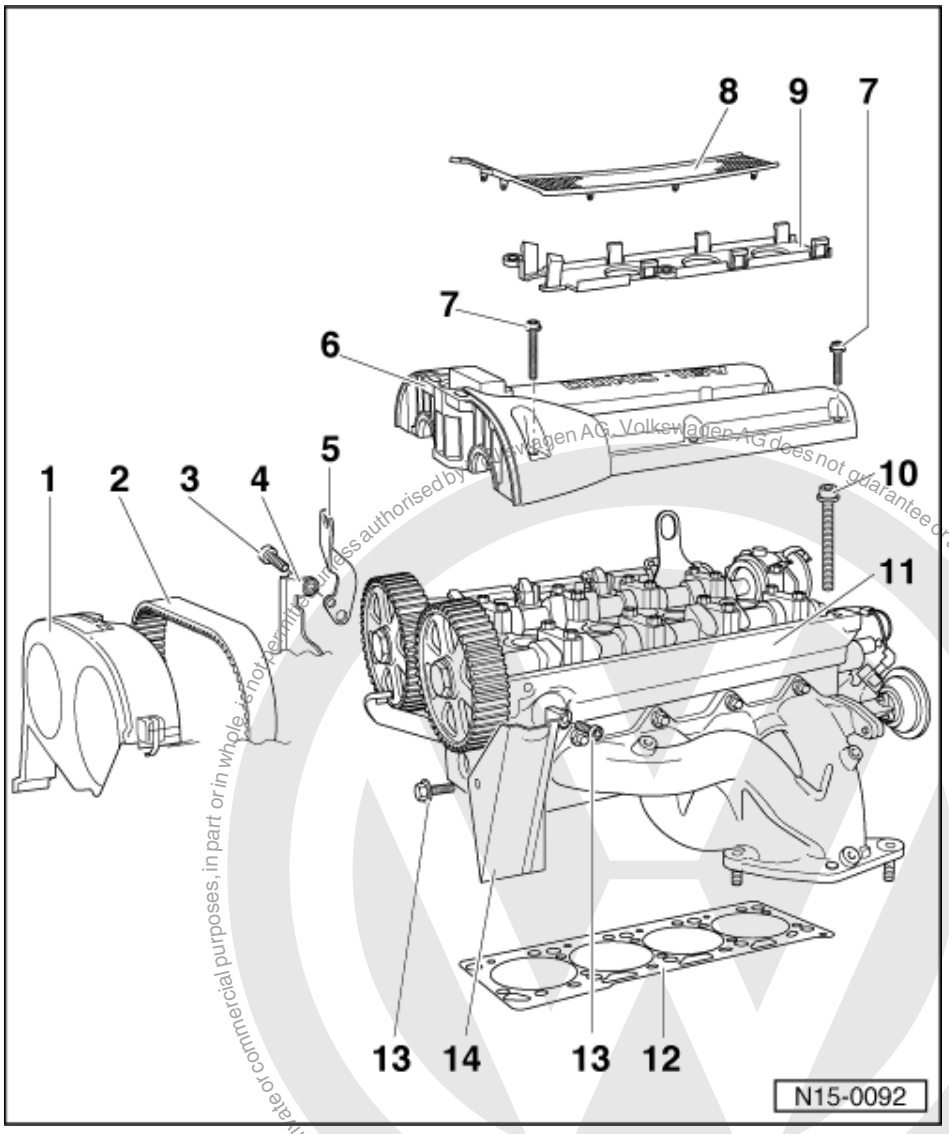

10 Cylinder head bolt

- Renew
- Note installation instructions and sequence when loosening and tightening
  => Page 38

11 Cylinder head

- Removing and installing
  => Page 38
- Check for distortion => Fig. 1
- After replacing renew the complete coolant

satelettronica
Protected by copyright. Copying for private or commercial purposes, in part or in whole, is not permitted unless authorised by Volkswagen AG. Volkswagen AG does not guarantee or accept any liability with respect to the correctness of information in this document. copyright by Volkswagen AG.

12 Cylinder head gasket
- Renew
- Metal gasket
- After replacing renew the complete coolant

13 10 Nm

14 Front toothed belt guard

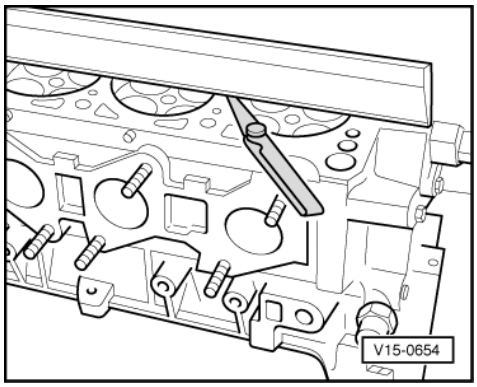

-> Fig. 1 Checking cylinder head for distortion

Max. permissible distortion: 0.05 mm

1.2 - Removing and installing cylinder head

Special tools, testers and auxiliary items

- Drip tray V.A.G 1306
- Pliers V.A.G 1921 for spring type clips
- Engine support bracket 10-222A with legs 10-222A/1
- Counter-hold tool 3415
- Torque wrench V.A.G 1331 (5...50 Nm)
- Torque wrench V.A.G 1332 (40...200 Nm)

Prerequisites

- The engine must be no more than warm to touch.
- The pistons must not be positioned at TDC.

Removing

- First check whether a coded radio is fitted. If this is the case obtain the anti-theft coding.
- With the ignition switched off disconnect battery earth strap.
- Drain coolant => Page 83 .
- Loosen hose clips and pull coolant hoses off coolant thermostat housing.

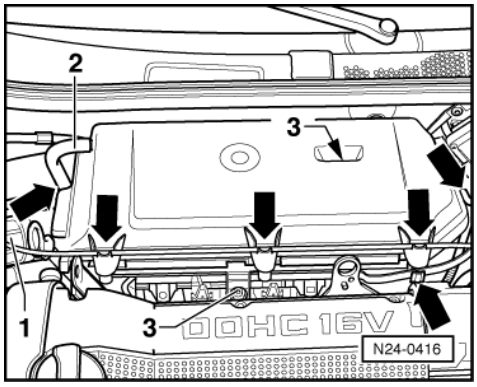

satelettronica
Protected by copyright. Copying for private or commercial purposes, in part or in whole, is not permitted unless authorised by Volkswagen AG. Volkswagen AG does not guarantee or accept any liability with respect to the correctness of information in this document. Copyright by Volkswagen AG.

- -> Release accelerator cable and earth strap from the retainer -arrows-. Pull off hoses -1- and -2-.
- Remove bolts -3- and take air cleaner off upwards.
- Loosen or separate the following components:
  - Central electrics connector
  - accelerator cable
  - High tension cable terminal 4 from distributor cap
  - The hose from intake manifold to activated charcoal filter system
  - The vacuum hose from inlet manifold to brake servo
  - The earth strap to ignition transformer on bracket
  - The 2 pin connector from knock sensor (rear of cylinder block)
  - the vacuum hose from fuel pressure regulator

The engine must be lowered slightly as follows to enable the crankshaft sprocket to be removed:

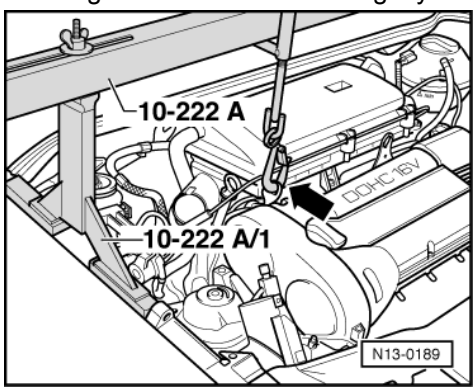

- -> Fit support10-222A with legs 10-222A/1 as shown.
- Take-up weight of engine, and remove right engine mounting.
- Remove ribbed belt cover.
- Lower engine until the pulley securing bolt is accessible.
- Mark ribbed belt direction of rotation.

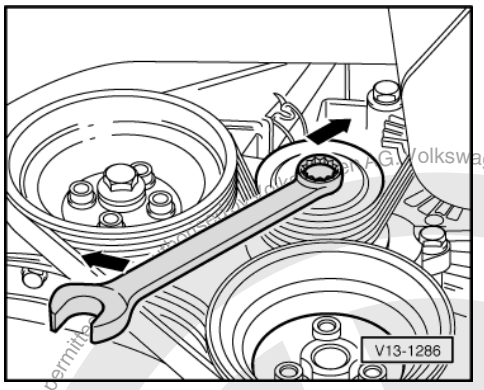

- -> Using a spanner on the securing bolt swivel tensioning roller in direction of arrow.
- Remove ribbed belt.
- Remove front exhaust pipe from exhaust manifold.

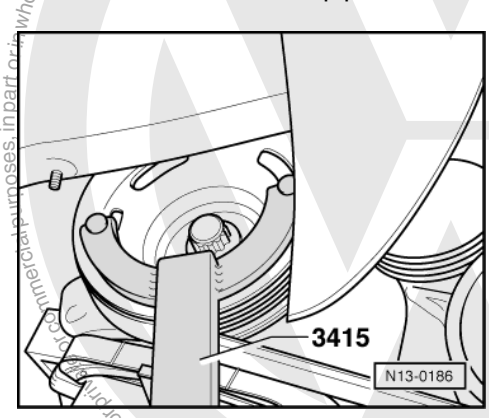

Protected by copyright. Copying for private or commercial purposes, in part or in whole, is not permitted. Copyright by Volkswagen AG. Volkswagen AG does not guarantee or accept any liability with respect to the correctness of information in this document.
satelettronica

- -> Remove V-belt pulley and toothed belt sprocket securing bolt. to do this hold the pulley with counter-hold tool 3415.
- Remove pulley. Refit securing bolt with two washers and tighten to secure toothed belt sprocket.
- Remove toothed belt guard lower part and loosen toothed belt tensioning roller.
- Then remove upper part and front toothed belt guards.
- Remove toothed belt.
- Lift engine slightly and refit the right engine mounting.
- Then remove the fuel rail as follows:
- Pull connector off injectors.
- Carefully push out the cable guide spreader pieces and remove cable guide.
- Unbolt fuel rail from intake manifold and pull out together with injectors.
- Place fuel rail to side (the fuel hoses remain connected).
- Remove rear toothed belt guard from cylinder head.
- Pull the clamps which secure the coolant pipe to coolant pump off the thermostat housing.
- Remove cylinder head cover.

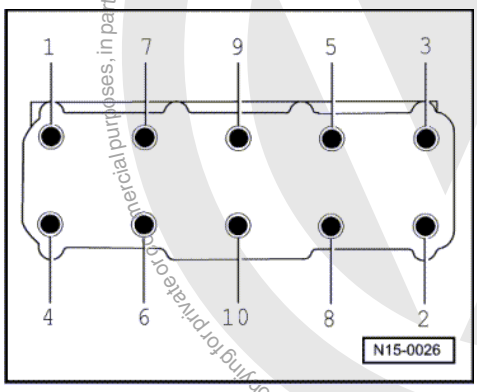

- -> Loosen socket head bolts in the sequence given and then remove completely.
- Carefully lift cylinder head off.

Installing

Notes:

- Only remove the new cylinder head gasket from its packing immediately before installing.
- Handle the new gasket with extreme care. Damaging will lead to leaks.

- Place a clean cloth in cylinders so that no dirt or emery cloth particles can get in between cylinder wall and piston.
- Also prevent dirt and emery cloth particles from getting into the coolant.

- Carefully clean cylinder head and cylinder block sealing surfaces. Thereby ensuring that no scoring or scratches are formed (when using abrasive paper the grade must not be less than 100).

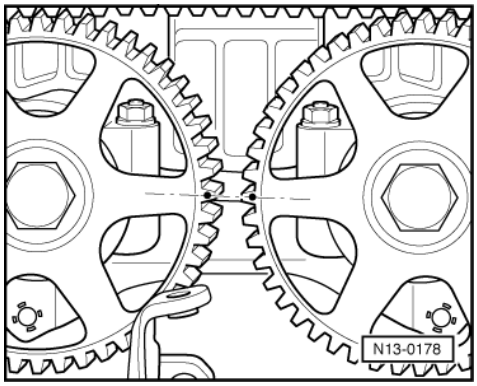

- Carefully remove metal particles, emery remains and cloths.
- Set No. 1 cylinder piston to top dead centre and then turn crankshaft back slightly.
- -> Set camshaft sprockets so that the markings align as shown.
- Fit new cylinder head gasket. Lettering (Part No.) must be readable.

satelettronica

- Place cylinder head on. When doing this observe the centralizing pins in cylinder block.

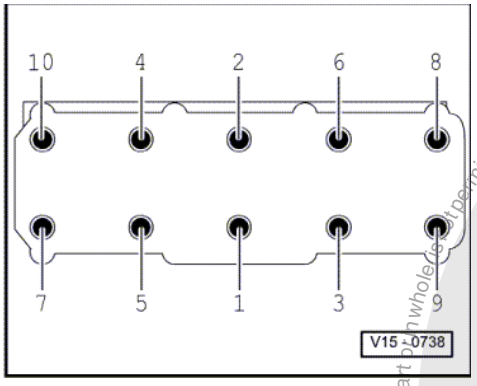

- Fit new cylinder head bolts and tighten hand tight.
- -> Tighten cylinder head in tightening sequence as follows:
- Pretighten all bolts to 40 Nm.
- Then tighten all bolts to 60 Nm.
- Then tighten all bolts a 1/4 turn (90 °) further using a ridged wrench.
- Then tighten all bolts again a 1/4 turn (90 °) further.

The rest of the assembly is basically a reverse of the dismantling sequence.

Installing toothed belt and adjusting timing => Page 18 .

Filling with new coolant => Page 83 .

1.3 - Checking compressions

Special tools, testers and auxiliary items

- Spark plug spanner 3122B
- Compression tester V.A.G 1381 or V.A.G 1763
- Torque wrench V.A.G 1331 (5...50 Nm)

Test conditions

- Engine oil temperature must be at least 30 °C.

Work sequence

- First remove the HT cable cover.
- Then pull off spark plug connector and unscrew spark plugs with spark plug spanner 3122B.
- Pull plug off Hall sender on distributor.
- Use a second mechanic to fully depress accelerator pedal.
- Check compressions with compression tester V.A.G 1381/V.A.G 1763.

Note:

See relevant test unit operating instructions for instructions on how to use test unit.

- Operate starter until tester shows no further pressure increase.

Compression pressure:

New: 10...15 bar
Wear limit: 7 bar

Protected by copyright. Copying for private or commercial purposes, in part or in whole, is not permitted unless authorised by Volkswagen AG. Volkswagen AG does not guarantee or accept any liability with respect to the correctness of information in this document. Copyright by Volkswagen AG.
satelettronica

Permissible difference between all cylinders: 3 bar

2 - Servicing valve gear

2.1 - Servicing valve gear

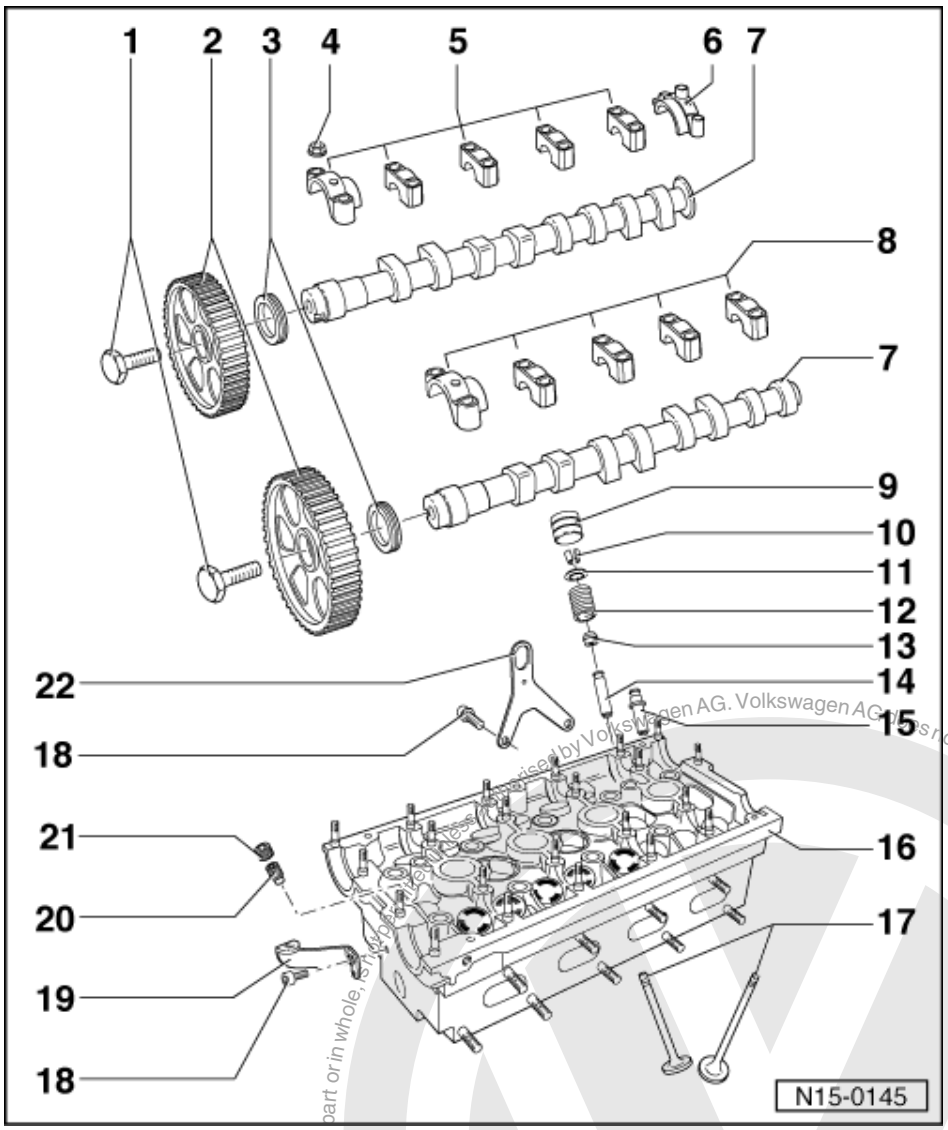

1 20 Nm + 1/4 turn (90 °) further
- Renew

2 Camshaft sprocket
- Note position when installing the toothed belt => Page 18

3 Oil seal
- Lightly oil sealing lip of oil seal
- Renewing=> Page 50

4 6 Nm + 1/4 turn (90 °) further

5 Bearing cap 0...4
- Installation position and installation sequence => Page 52 , removing and installing camshaft
- Lightly coat contact surface of bearing cap 0 with sealant AMV 174 004 01

Protected by copyright. Copying for private or commercial purposes, in part or in whole, is not permitted unless authorised by Volkswagen AG. Volkswagen AG does not guarantee or accept any liability with respect to the correctness of information in this document. Copyright by Volkswagen AG.
satelettronica

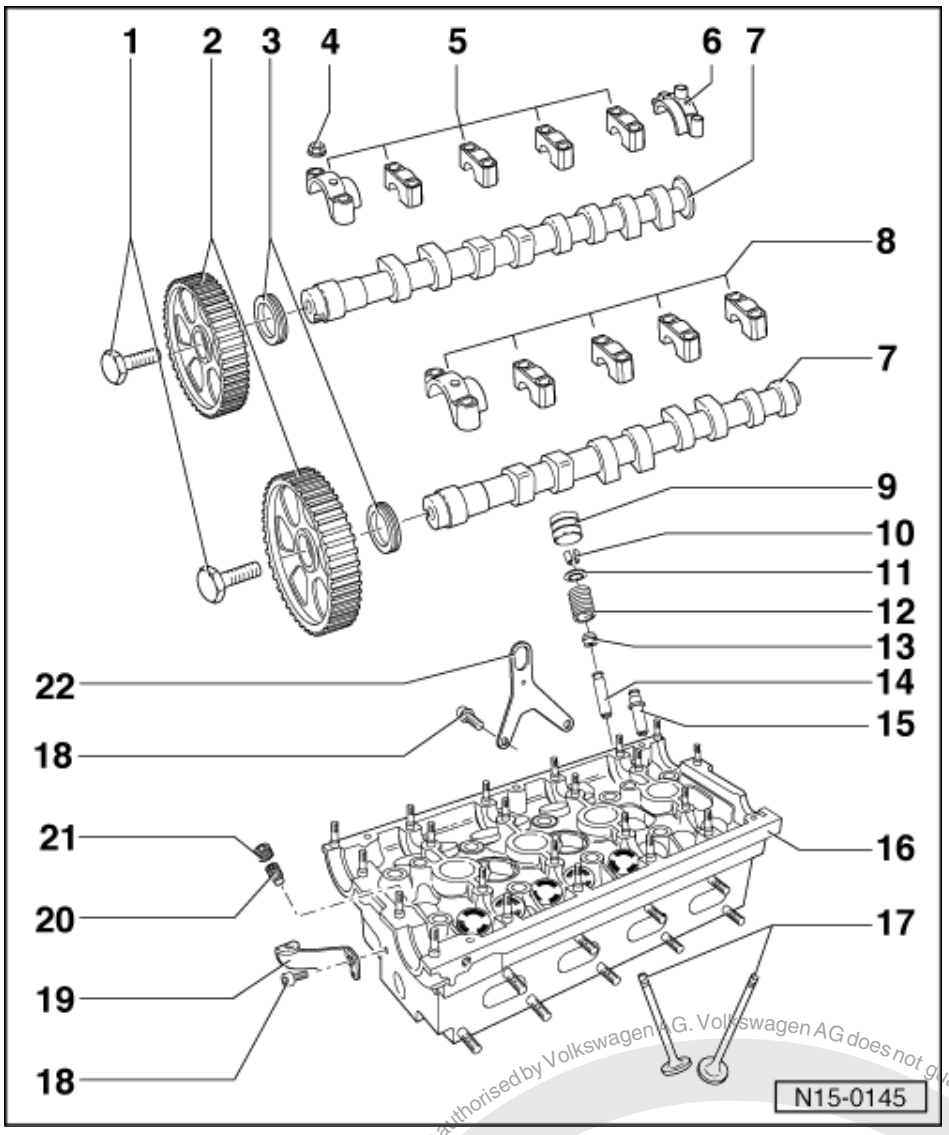

6 Bearing cap
- For securing ignition distributor
- Lightly coat contact surface with sealant AMV 174 004 01

7 Camshafts
- Checking axial clearance => Fig. 2
- Removing and installing
  => Page 52
- Checking radial clearance with plastigage
  Wear limit: 0.1 mm
- Run-out: max. 0.01 mm
- Identification and valve timing
  => Page 47 , Fig. 3

8 Bearing cap 5...9
- Installation position and installation sequence => Page 52 , removing and installing camshaft
- Lightly coat contact surface of bearing cap 5 with sealant AMV 174 004 01

satelettronica
Protected by copyright. Copying for private or commercial purposes, in any form or by any means, is not permitted unless authorised by Volkswagen AG. Volkswagen AG does not guarantee or accept any liability with respect to the correctness of information in this document. Copyright by Volkswagen AG.

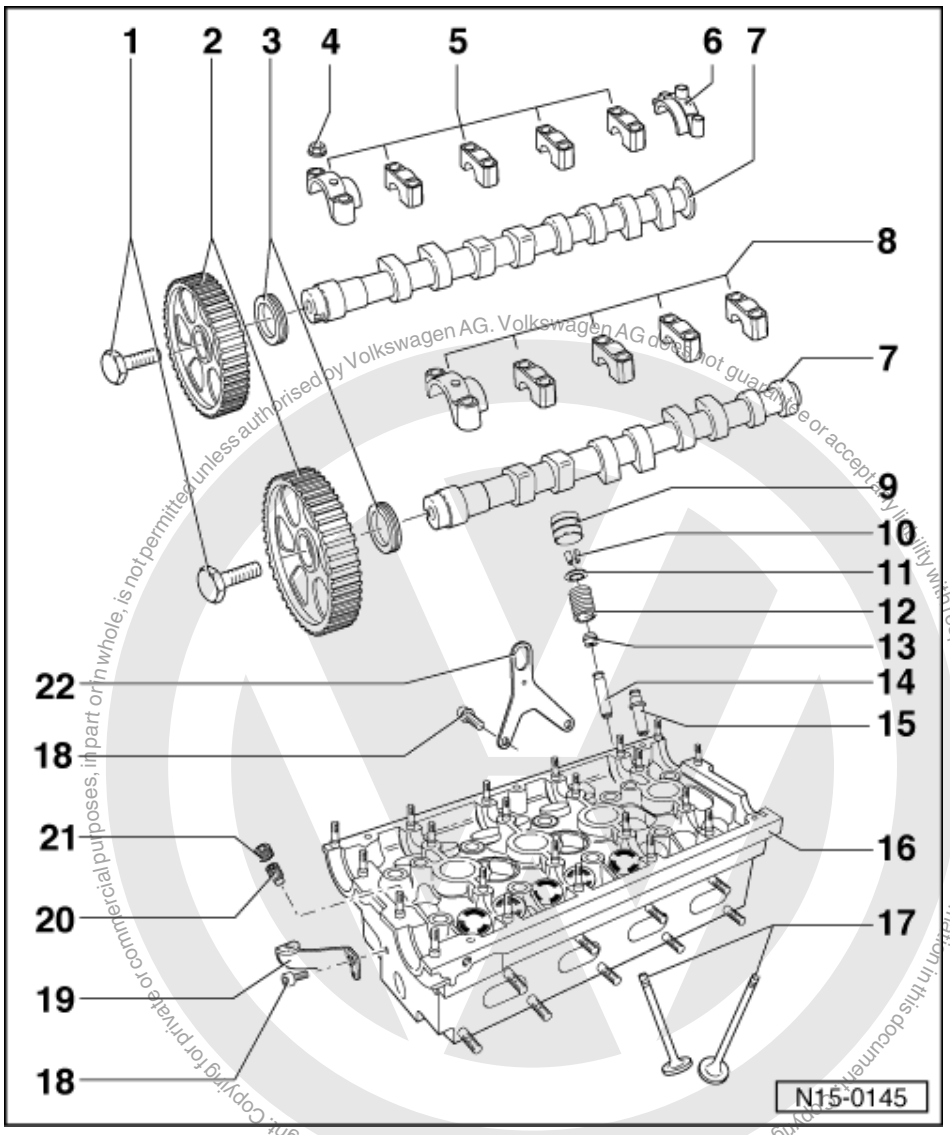

9 Bucket tappet
- Do not interchange
- With hydraulic valve clearance compensation
- Checking => Page 51
- Store with cam contact surface downwards
- Before installing check camshaft axial clearance => Fig. 2
- Oil contact surface

10 Cotters

11 Upper valve spring plate

12 Valve spring
- Removing and installing:
  Cylinder head
  removed: with 3362
  installed: => Page 55 , renewing valve stem seals

13 Valve stem seal
- Renewing=> Page 55

satelettronica

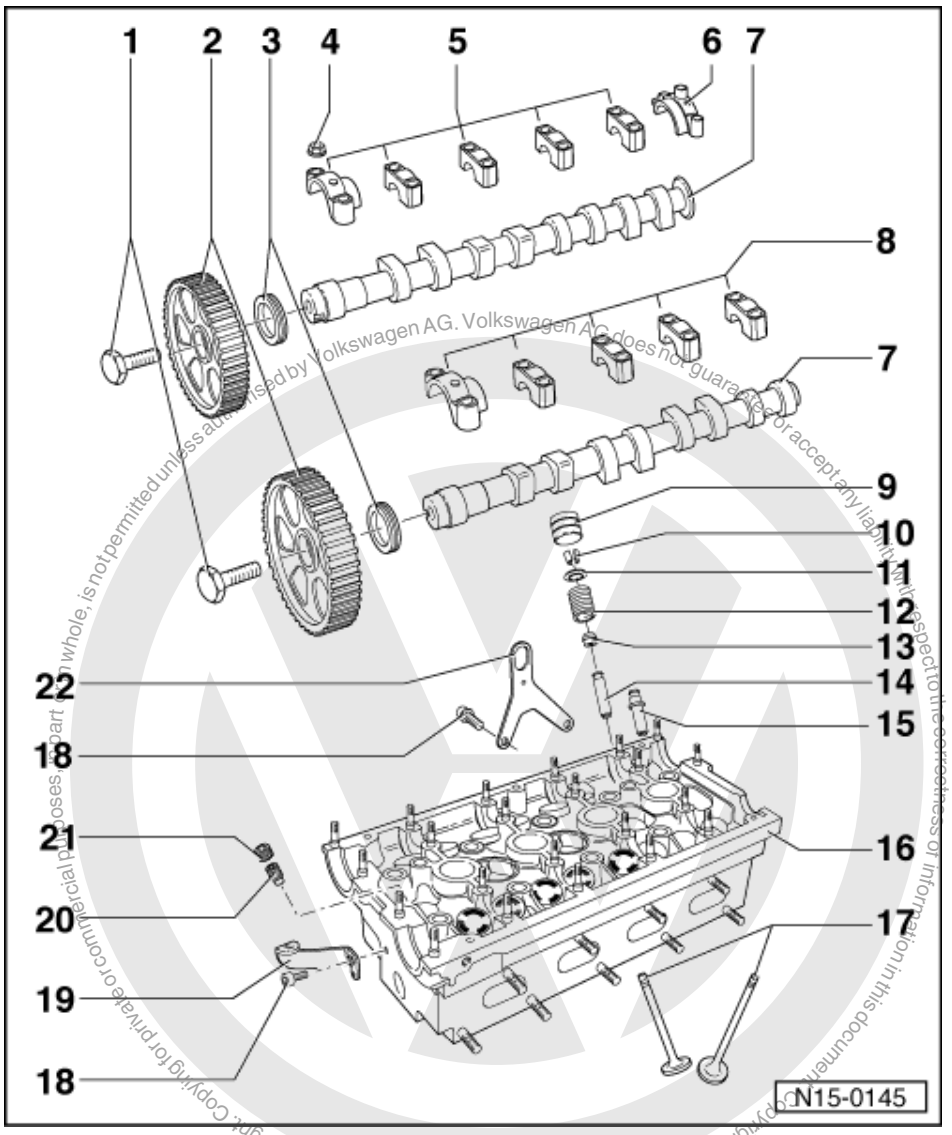

14 Valve guide
- Checking => Page 54
- Renewing => Page 54

15 Service part - valve guide
- With collar

16 Cylinder head
- Reworking valve seats => Page 48
- Reworking sealing surface => Fig. 1

17 Valves
- Do not rework only grinding-in is permitted
- Valve dimensions => Fig. 4

18 20 Nm

19 Retainer

Protected by copyright. Copying for private or commercial purposes, in part or in whole, is not permitted unless authorised by Volkswagen AG. Volkswagen AG does not guarantee or accept any liability with respect to the correctness of information in this document. Copyright by Volkswagen AG.

satelettronica

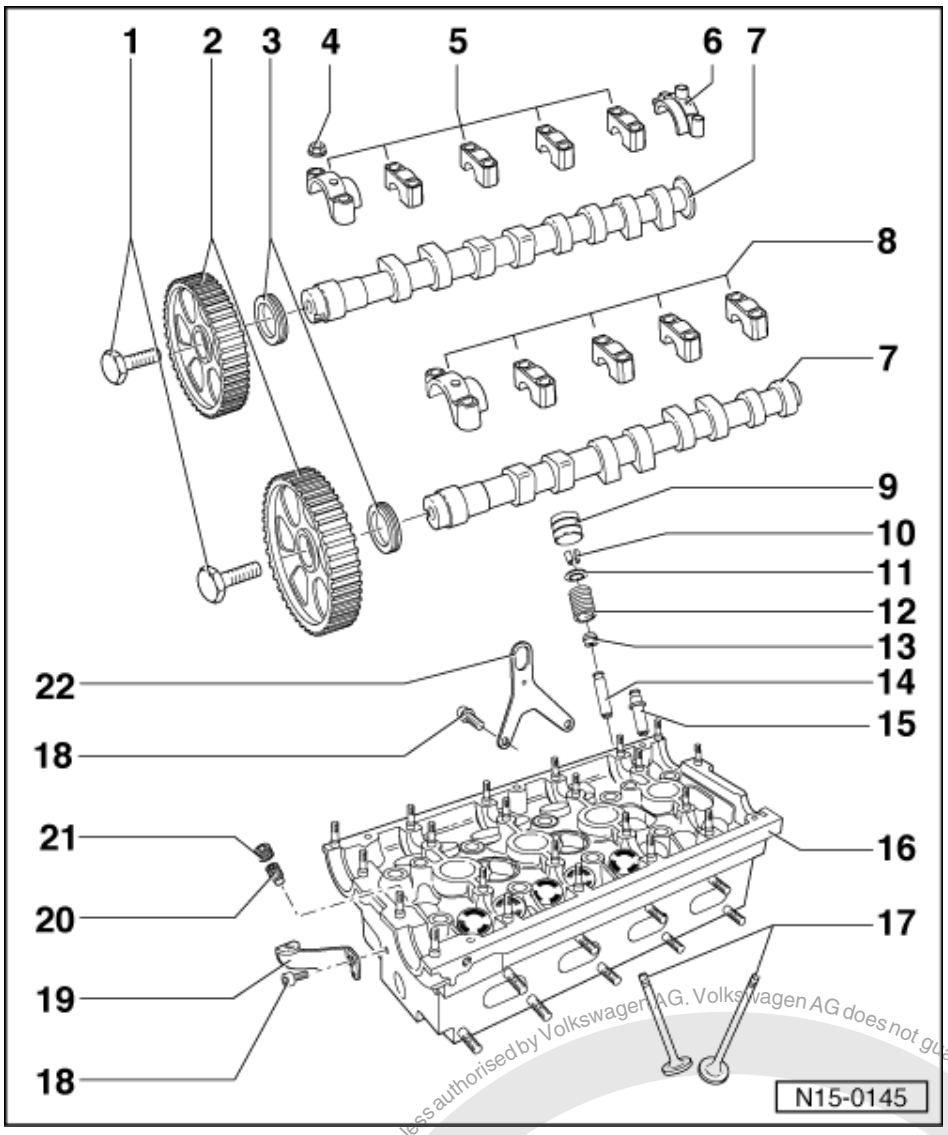

20 Non-return valve, 6 Nm
- Install with D6
- Do not overtighten, otherwise the valve can stick

21 Sealing plug, 40 Nm
- Install with D6

22 Lifting eye

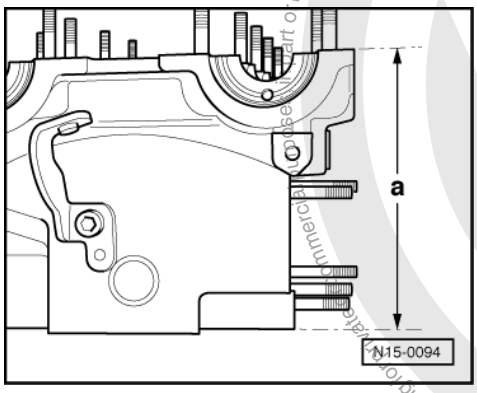

Protected by copyright. Copying for private or commercial purposes, in part or in whole, is not permitted unless authorised by Volkswagen AG. Volkswagen AG does not guarantee or accept any liability with respect to the correctness of information in this document. Copyright by Volkswagen AG.
satelettronica

-> Fig. 1 Reworking cylinder head sealing surface

Cylinder head reworking dimension:
a = At least 128.1 mm

Note:

When the sealing surface has been reworked, the valves must be set deeper by the same amount (rework valve seat inserts), otherwise valves will contact pistons. Ensure when doing this that the permissible minimum dimension is maintained => Page 48 .

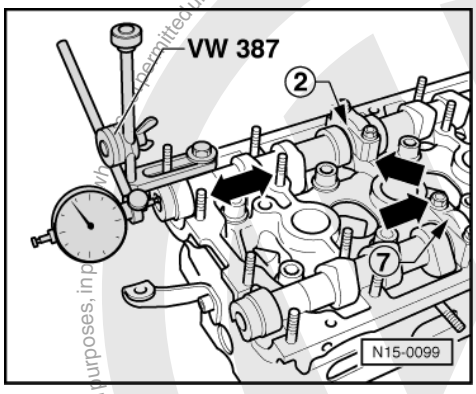

-> Fig. 2 Checking camshaft axial clearance

Special tools, testers and auxiliary items

- Universal dial gauge bracket VW 387
- Dial gauge

Check with bucket tappets removed and bearing caps 2 or 7 fitted.

Wear limit: max. 0.15 mm

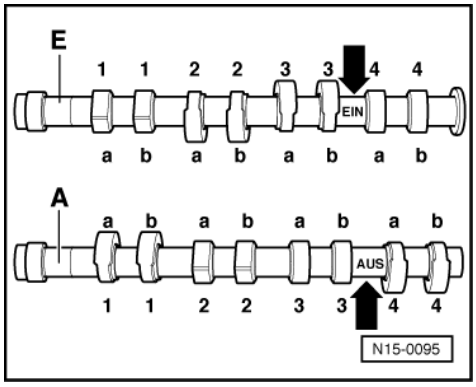

-> Fig.3 Camshaft identification, valve timing

Identification

	Identification between cyl. 3 and 4 cams
Inlet shaft -E-	"EIN" and "036E"

Protected by copyright. Copying for private or commercial purposes, in part or in whole, is not permitted unless authorised by Volkswagen AG. Volkswagen AG does not guarantee or accept any liability with respect to the correctness of information in this document. Copyright by Volkswagen AG.
satelettronica

	Identification between cyl. 3 and 4 cams
Exhaust shaft -A-	"AUS" and "036T"

Valve timing at 1 mm valve lift

The cams of the individual cam pairs are offset to one another. This results in different valve timing for the cams "a" and "b".

	Cams "a"	Cams "b"
Inlet opens after TDC	12 °	10 °
Inlet closes after BDC	32 °	30 °
Exhaust opens before BDC	28 °	30 °
Exhaust closes before TDC	8 °	10 °

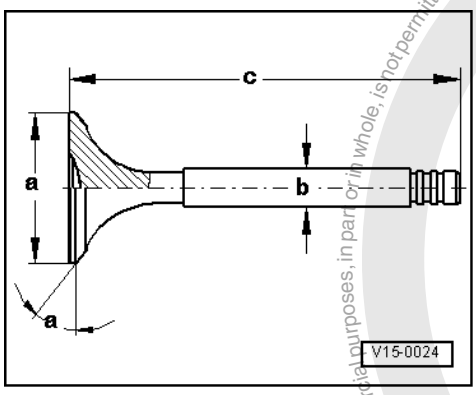

-> Fig. 4 Valve dimensions

Note:

Valves must not be reworked. Only lapping-in is permitted.

Dimension		Inlet valve	Exhaust valve
øa	mm	29.5	26.0
øb	mm	5.973	5.953
c	mm	97.8	97.2
α	<°	45	45

2.2 - Reworking valve seats

Special tools, testers and auxiliary items

- Depth gauge
- Valve seat refacing tool

Notes:

- When repairing engines with leaking valves, it is not sufficient to replace or renew valve seats and valves. It is also necessary to check the valve guides for wear. This particularly important on high mileage engines => Page 54 .
- The valve seats should only be reworked just enough to produce a perfect seating pattern. The maximum permissible reworking dimension must be calculated before reworking commences. If the reworking dimen-

Protected by copyright. Copying for private or commercial purposes, in part or in whole, is not permitted unless authorised by Volkswagen AG. Volkswagen AG does not guarantee or accept any liability with respect to the correctness of information in this document. Copyright by Volkswagen AG.
satelettronica

sion is exceeded, the function of the hydraulic tappets can no longer be guaranteed and the cylinder head should be renewed.

The max. permissible reworking dimension is calculated as follows:

- Insert valve and press firmly against seat.

Note:

If the valve is to be renewed as part of a repair, use a new valve for the calculation.

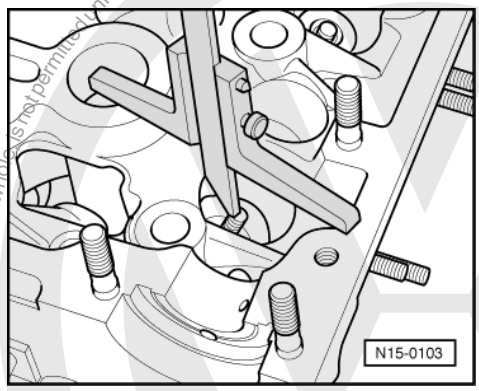

- -> Measure distance between end of valve stem and upper edge of cylinder head.
  Calculate max. permissible reworking dimension from measured distance and minimum dimension.

Minimum dimension:
Inlet valve 30.5 mm
Exhaust valve 30.9 mm

Measured distance minus minimum dimension
= max. permissible reworking dimension.

Example:

-	Measured distance	31.3	mm
	Minimum dimension	30.9	mm
=	max. perm. rework dimension*	0.4	mm

*) The max. permissible reworking dimension is shown on illustrations for reworking valve seats as dimension "b".

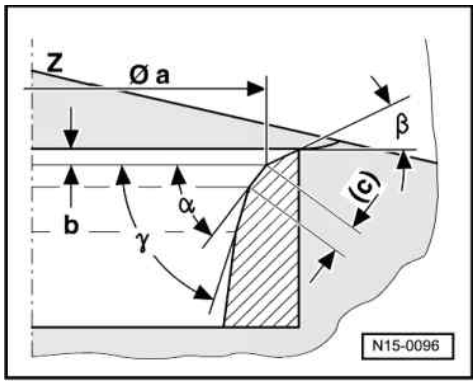

Protected by copyright. Copyright by Volkswagen AG. Volkswagen AG does not guarantee or accept any liability with respect to the correctness of information in this document. Copyright by Volkswagen AG. Reproduction for commercial purposes, in part or in whole, is not permitted unless authorised by Volkswagen AG.
satelettronica

-> Reworking inlet valve seat

a	= 28.7 mm ø
b	= Max. permissible reworking dimension*
c	= 1.5...1.8 mm
Z	= Cylinder head lower edge
α	= 45 °valve seat angle
β	= 30 °upper correction angle
γ	= 60 °lower correction angle

Reworking exhaust valve seat

a	= ø25.0 mm
b	= Max. permissible reworking dimension*
c	= approx. 1.8 mm
Z	= Cylinder head lower edge
α	= 45 °valve seat angle
β	= 30 °upper correction angle
γ	= 60 °lower correction angle

*) Calculating max. permissible reworking dimension => Page 49 .

2.3 - Replacing camshaft oil seal

Special tools, testers and auxiliary items

- Engine support bracket 10-222A with legs 10-222A/1
- Torque wrench V.A.G 1331 (5...50 Nm)
- Torque wrench V.A.G 1332 (40...200 Nm)
- Counter-hold tool 3036
- Counter-hold tool 3415
- Oil seal extractor 2085
- Fitting tool 3241

Removing

- First remove toothed belts
  => Page 18 .
- Turn crankshaft back slightly.
- Loosen camshaft sprockets. To do this hold camshaft sprockets with counter-hold 3036.
- Unscrew inner part of oil seal extractor 2085 two turns (approx. 3 mm) out of the outer part and lock in position with knurled screw.

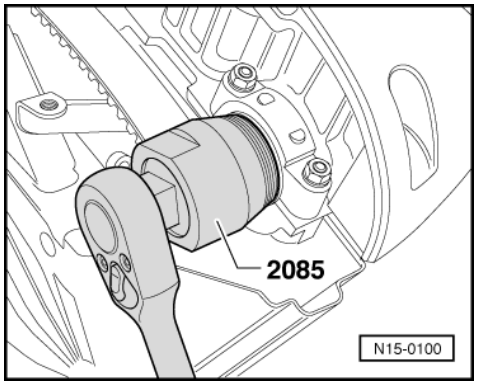

- Oil threaded head of oil seal extractor and tap extractor lightly into oil seal with a plastic hammer.
- -> Screw puller forcibly as far as possible into seal.
- Loosen knurled screw and turn inner part of extractor against camshaft until oil seal has been extracted.

Protected by copyright. Copyright by Volkswagen AG. Volkswagen AG does not guarantee or accept any liability with respect to the correctness of information in this document. Copyright by Volkswagen AG. Reproduction, in part or in whole, is only permitted with express authorisation from Volkswagen AG for commercial purposes.
satelettronica

Installing
- Lightly oil sealing lip of oil seal.

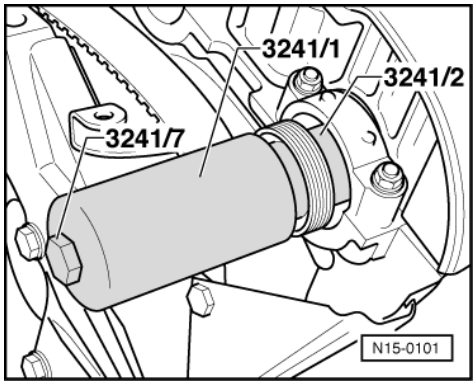

- -> Place the guide sleeve 3241/2 onto the camshaft journal.
- Slide oil seal over the guide sleeve.
- Press oil seal in onto stop with press sleeve 3241/1 and the bolt 3241/7.
- Fit camshaft sprockets.
- Hold the respective camshaft sprocket with counter-hold tool 3036 and tighten to
  20 Nm
  and then turn bolt
  1/4 turn (90 °) further.

The rest of the assembly is basically a reverse of the dismantling sequence.
Installing toothed belt and adjusting timing => Page 18 .

2.4 - Checking hydraulic bucket tappets

Special tools, testers and auxiliary items
- Feeler gauge
- Wood or plastic wedge

Notes:
- Renew defective tappet complete (cannot be adjusted or repaired).
- Irregular valve noises when starting engine are normal.

Test sequence
- Start engine and run until the radiator fan has switched on once.
- Increase engine speed to about 2500 rpm for approx. 2 minutes.

If the hydraulic tappets are still noisy, locate defective tappets as follows:
- Remove cylinder head cover.
- Rotate crankshaft clockwise, until cam of the tappet to be checked is pointing upwards.
- Determine play between cam and bucket tappet.

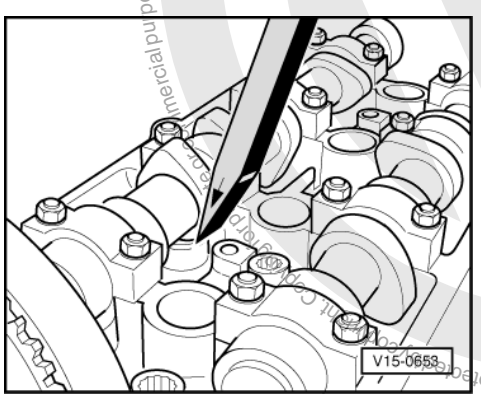

Protected by copyright. Copyright by Volkswagen AG. Volkswagen AG does not guarantee or accept any liability with respect to the correctness of information in this document. Copyright by Volkswagen AG.
satelettronica

- -> Push bucket tappet down lightly with a wooden or plastic wedge. If when the bucket tappet is pushed down a 0.2 mm thick feeler gauge can be pushed between the camshaft and bucket tappet, the bucket tappet is to be replaced.

Note:

After installing new tappets the engine must not be started for approx. 30 minutes. Hydraulic compensation elements must settle (otherwise valves will strike pistons).

2.5 - Removing and installing camshaft

Special tools, testers and auxiliary items

- Engine support bracket 10-222A with legs 10-222A/1
- Counter-hold tool 3415
- Counter-hold tool 3036
- Torque wrench V.A.G 1331 (5...50 Nm)
- Torque wrench V.A.G 1332 (40...200 Nm)
- Sealing compound AMV 174 004 01

Removing

- First remove toothed belts
  => Page 18 .

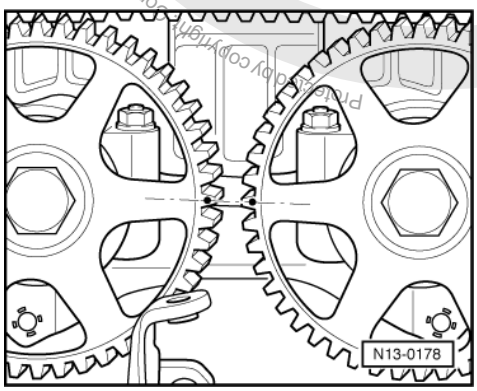

- Turn the crankshaft back slightly.
- Loosen the camshaft sprockets. To do this hold camshaft sprockets with counter-hold tool 3036.
- -> Set camshaft sprockets so that the markings align as shown.
- Remove camshaft sprockets.
- Remove cylinder head cover.
- Remove distributor.

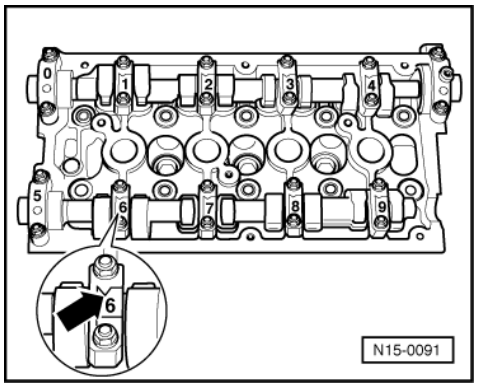

satelettronica

Inlet camshaft

- -> First remove bearing caps 0, 1 and 3 as well as the distributor securing cap.
- Then slacken off bearing caps 2 and 4 alternately and diagonally.

Exhaust camshaft

- First remove bearing caps 5, 6 and 8.
- Then slacken off bearing caps 7 and 9 alternately and diagonally.

Installing

Conditions

• The pistons must not be positioned at TDC.

Note:

Note the fitting position of the bearing cap: The point -arrow- must point to the exhaust side.

- Oil the camshaft contact surfaces.
- Fit the camshaft so that the toothed belt sprocket recesses are opposite one another (top dead centre No. 1 cylinder).

Inlet camshaft

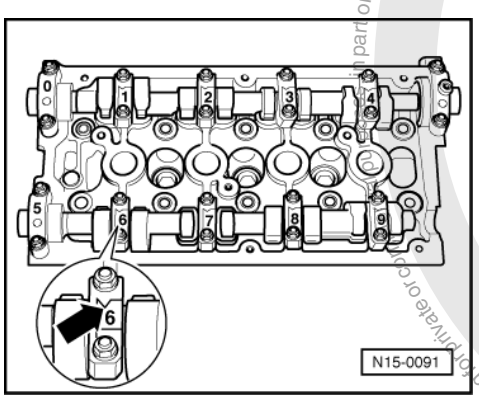

- -> Tighten bearing caps 2 and 4 alternately and diagonally and then tighten to
  6 Nm.
- Lightly coat contact surface of bearing cap 0 and distributor securing cap with sealant AMV 174 004 01.

- Install bearing caps 0, 1 and 3 and also the distributor securing cap and also tighten to
  6 Nm.
  When doing this insert distributor for centralizing securing cap.
- Turn all nuts by 1/4 turn (90 °) further.

Exhaust camshaft

- Tighten bearing caps 7 and 9 alternately and
  diagonally and then tighten to
  6 Nm.
- Coat bearing cap 5 seating areas lightly with sealant AMV 174 004 01.
- Install bearing caps 5, 6 and 8 and also tighten to
  6 Nm.
- Turn all nuts by 1/4 turn (90 °) further.
- Install camshaft sprockets.
- Hold the respective camshaft sprocket with counter-hold tool 3036 and tighten to
  20 Nm
  and then turn bolt
  1/4 turn (90 °) further.

Copyright by Volkswagen AG. Protected by copyright. Copying for private or commercial purposes, in part or in whole, is not permitted unless authorised by Volkswagen AG. Volkswagen AG does not guarantee or accept any liability with respect to the correctness of information in this document.
satelettronica

The rest of the assembly is basically a reverse of the dismantling sequence.

Installing toothed belt and adjusting timing => Page 18 .

Note:

When new tappets have been installed the engine must not be started for about 30 minutes. Hydraulic compensation elements must settle (otherwise valves will strike pistons).

2.6 - Checking valve guides

Special tools, testers and auxiliary items

- Universal dial gauge bracket VW 387
- Dial gauge

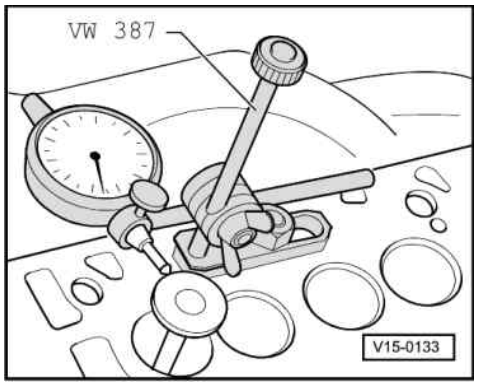

Test sequence

- -> Insert new valve into guide until end of valve stem is flush with end of guide. Due to the slight difference in stem dimensions, ensure that only an inlet valve is used in the inlet guide and an exhaust valve in the exhaust guide.
- Determine rock.
  Wear limit: 0.8 mm

2.7 - Renewing valve guides

Special tools, testers and auxiliary items

- Drift 3360
- Support 3361
- Hand reamer 3363 and cutting fluid

Removing

- First check whether the valve seat insert rings and if necessary the cylinder head sealing surface can be reworked. If this is not the case then the valve guide should not be replaced.

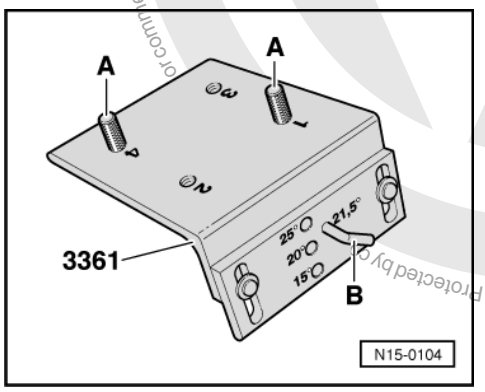

satelettronica

-> First set the support as follows:

- Insert locating pin for the cylinder head bolt holes -A- in the screw in positions 1 and 4.
- Place pin -B- in the valve angle hole 21.5 <° .

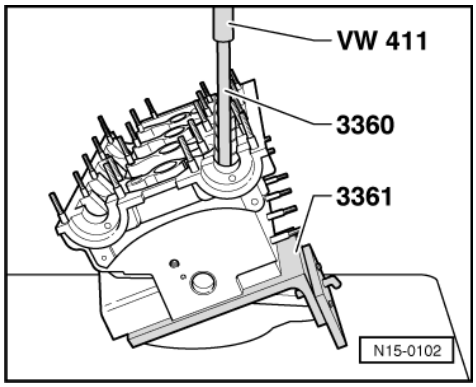

- -> Press the worn valve guides out with drift 3360 from the camshaft side.

Note:

If repair version guides are already fitted in the cylinder head, these must be pressed out from the combustion chamber side. To do this the cylinder head can be supported on the valve spring seats with sleeve VW 421 and press piece VW 447h.

Installing

- Coat the new valve guides with oil and press with drift 3360 into cold cylinder head from the camshaft side until the shoulder makes contact.

Note:

When the shoulder on guide makes contact, the pressure must not exceed 1.0 t otherwise shoulder may break off.

- Ream guides out with hand reamer 3363 using plenty of cutting fluid.
- Rework valve seats => Page 48 .

2.8 - Renewing valve stem seals

(with cylinder head fitted)

Special tools, testers and auxiliary items

- Engine support bracket 10-222A with legs 10-222A/1
- Counter-hold tool 3415
- Torque wrench V.A.G 1331 (5...50 Nm)
- Torque wrench V.A.G 1332 (40...200 Nm)
- Spark plug spanner 3122B
- Puller 3364
- Pressure hose VW 653/3
- Fitting tool 3362 with press piece 3362/1
- Fitting tool 3365

Removing

- First remove toothed belts
  => Page 18 .
- Remove camshafts => Page 52 .
- Remove the bucket tappets and place them with the contact surface downwards. When doing this ensure that the tappets are not interchanged.

Protected by copyright. Copyright by Volkswagen AG. Volkswagen AG does not guarantee or accept any liability with respect to the correctness of information in this document. Copyright by Volkswagen AG. Reproduction for commercial purposes, in part or in whole, is not permitted unless authorised by Volkswagen AG.
satelettronica

- Remove spark plugs with spark plug spanner 3122B.
- Set piston of appropriate cylinder to "bottom dead centre".

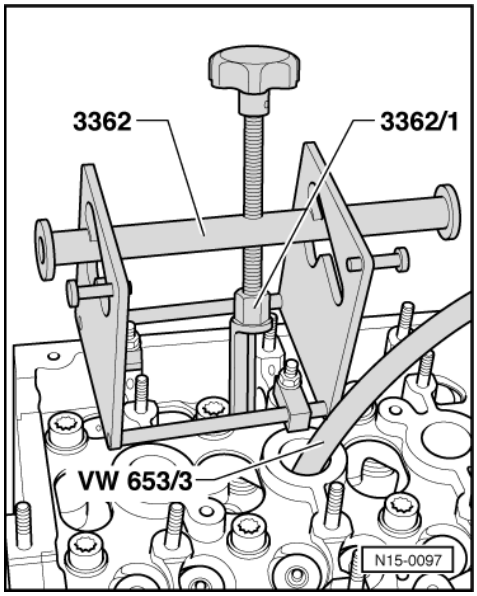

- -> Mount fitting tool 3362 with press piece 3362/1.
- Screw pressure hose VW 653/3 into the spark plug thread.
- Connect pressure hose to compressed air system supplying
  at least 6 bar
  and remove valve springs.
- Pull off valve stem seals with 3364.

Installing

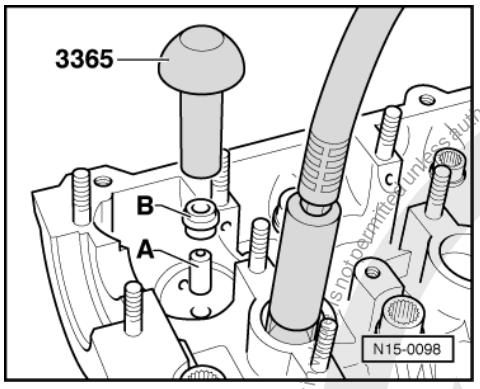

- -> Place the plastic sleeve supplied on the appropriate valve stem. This will prevent the new valve stem seal being damaged.
- Place new valve stem seal in fitting tool 3365.
- Oil valve stem seal sealing lip and press carefully onto the valve guide.

Protected by copyright. Copying for private or commercial purposes, in part or in whole, is not permitted unless authorised by Volkswagen AG. Volkswagen AG does not guarantee or accept any liability with respect to the correctness of information in this document. Copyright by Volkswagen AG.
satelettronica

17 - Lubrication

1 - Removing and installing parts of the lubrication system

1.1 - Removing and installing parts of the lubrication system

Note:
The oil level must not be above the max. mark - danger of damaging catalyst!
Marks => Page 63 , Fig. 4 .
Checking oil pressure => Page 72
Oil system capacity1):
without oil filter 3.0 ltrs.
with oil filter 3.4 ltrs.
1) Up-to-date figures:
=> Exhaust emissions test binder
Engine oil specifications:
Use engine oil to VW standard 500 00 or 501 01. Only in exceptional cases: Multi-grade oils corresponding to API-SF or SG.

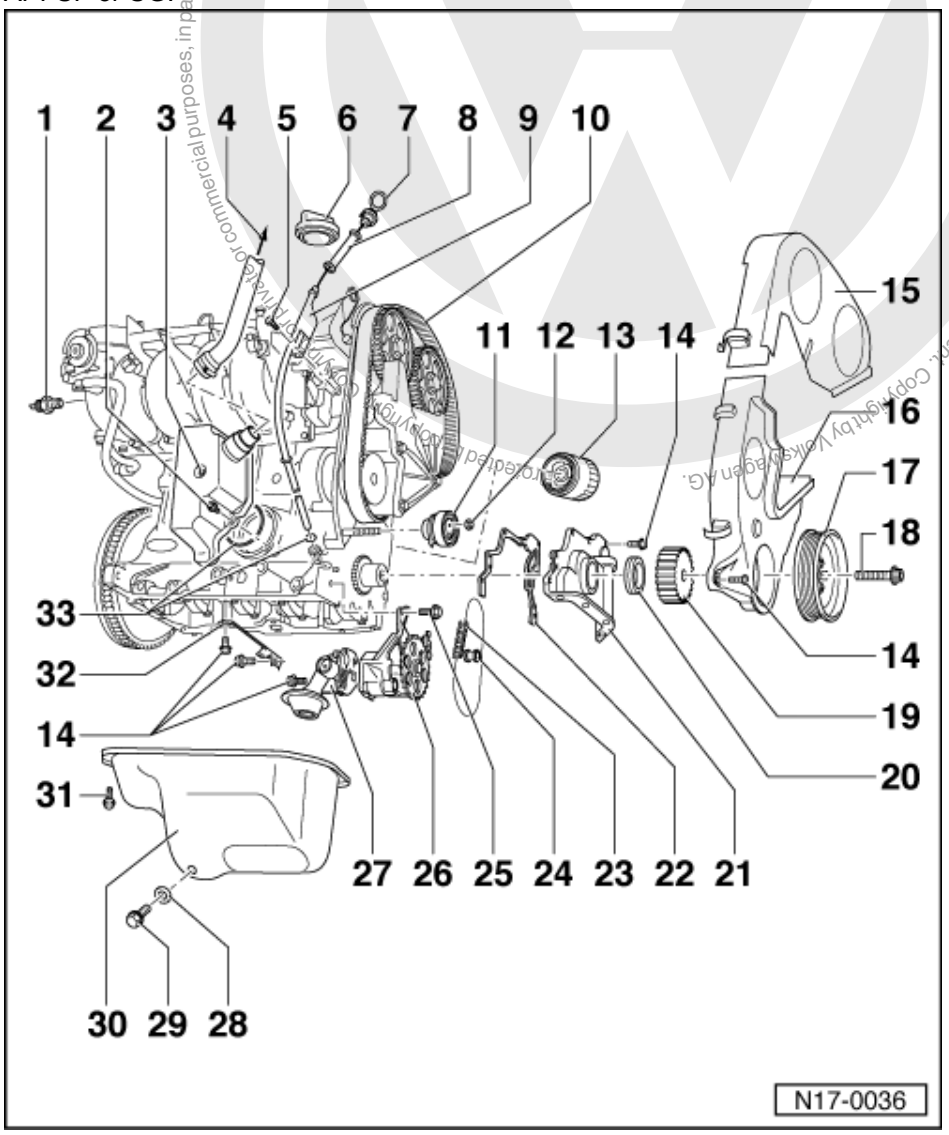

satelettronica

Vehicles with oil pump driven by chain
Vehicles with Duo-centric oil pump => Page 64

1 0.25 bar oil pressure switch (F22), 25 Nm
- Identification: blue
- Checking => Page 72
- If sealing ring is leaking nip open and replace.

2 10 Nm

3 Oil separator

4 To air cleaner

5 20 Nm

6 Cap
- Renew seal if damaged

7 Dipstick
- The oil level must not be above the max. mark!
- Marking => Fig. 4

8 Guide
- Pull off to draw out oil

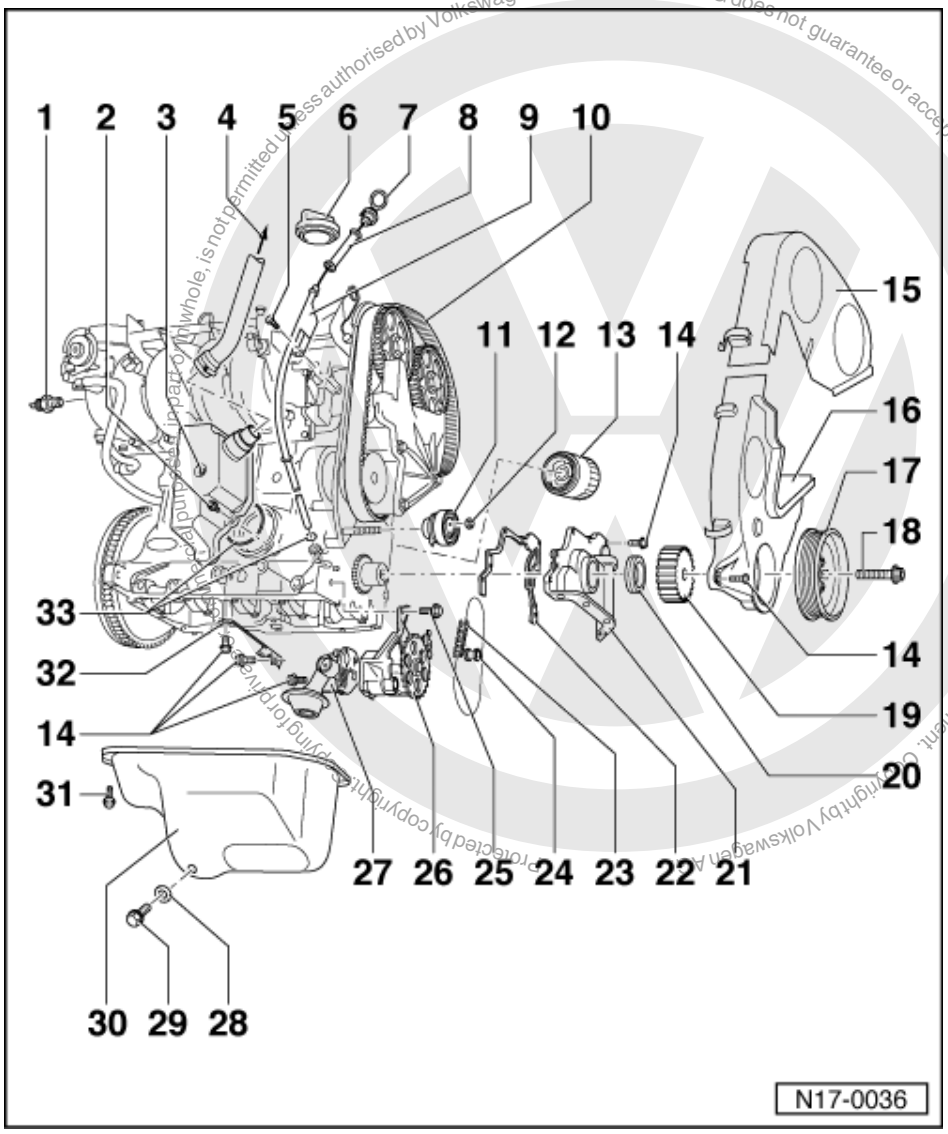

9 Guide tube

10 Toothed belt
- Removing and installing

Copyright by Volkswagen AG. Volkswagen AG does not guarantee or accept any liability with respect to the correctness of information in this document. Copying for private and commercial purposes, in part or in whole, is not permitted unless authorised by Volkswagen AG. Volkswagen AG does not guarantee or accept any liability with respect to the correctness of information in this document. Copyright by Volkswagen AG. Protected by copyright.

satelettronica

=> Page 18
- Check for wear
- Do not kink

11 Tensioner
- Tensioning toothed belts
  => Page 18

12 20 Nm

13 Oil filter
- Loosen on hexagon
- Tighten by hand
- Observe installation instructions on oil filter

14 10 Nm

15 Toothed belt guard - upper part

16 Toothed belt guard - lower part

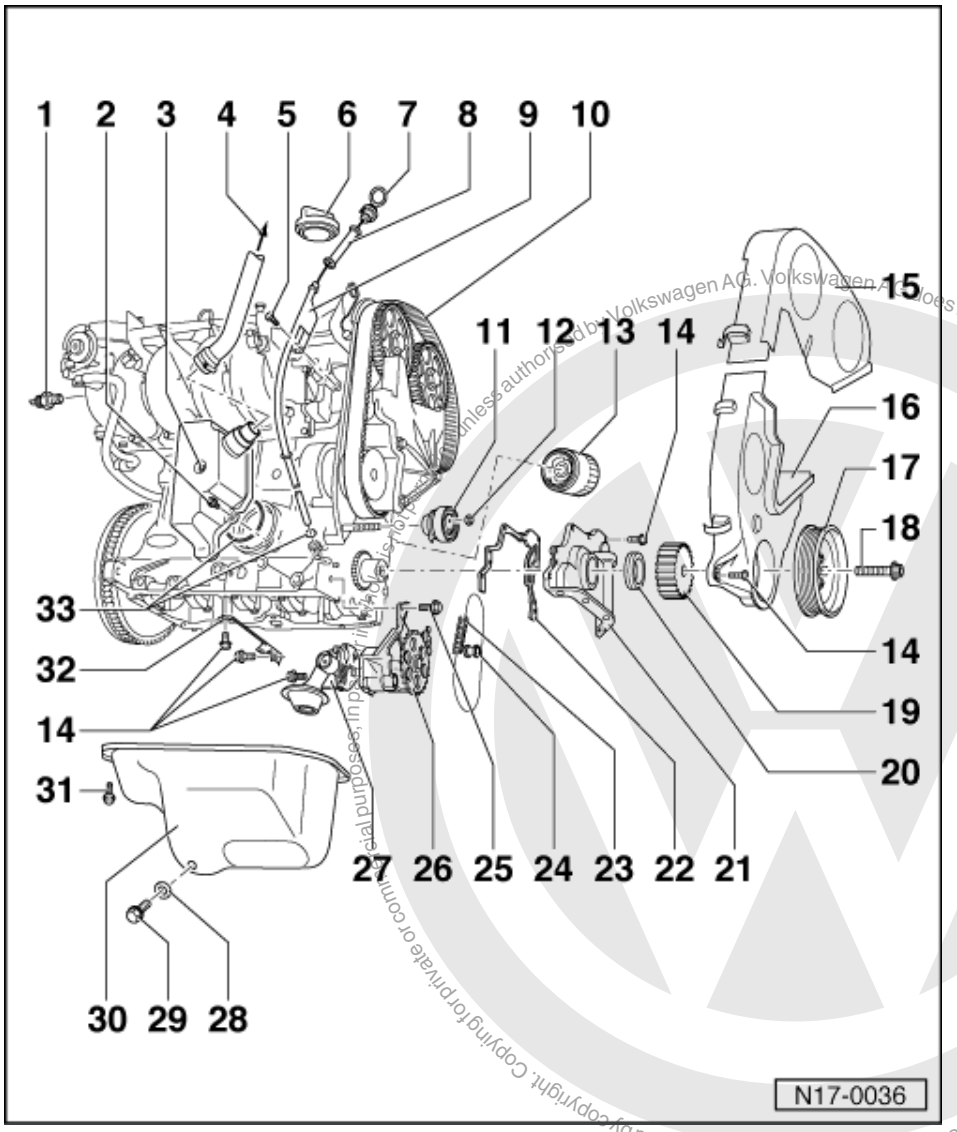

17 Belt pulley
- When installing note fixing arrangement
- Removing and installing ribbed belt => Page 17

18 90 Nm + 1/4 turn (90 °) further
- Renew
- Oil threads
- The turning further can be done in several stages
- The turning further angle can be measured with a commercial protractor e.g. Hazet 6690

satelettronica
Protected by copyright. Copying for private or commercial purposes, in part or in whole, is not permitted unless authorised by Volkswagen AG. Volkswagen AG does not guarantee or accept any liability with respect to the correctness of information in this document. Copyright by Volkswagen AG.

19 Crankshaft toothed belt sprocket

20 Oil seal

- Renewing => Page 26

21 Sealing flange

22 Gasket

- Metal gasket
- Renew

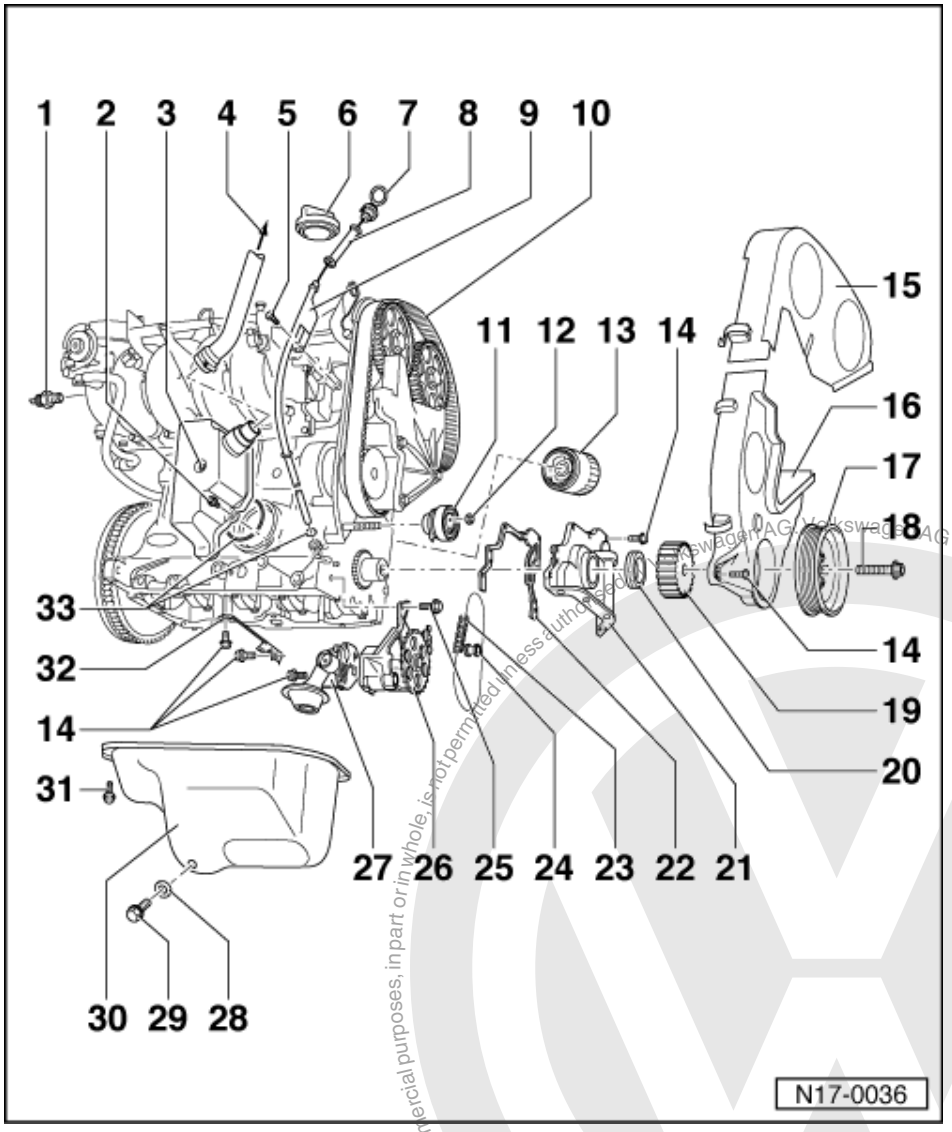

23 Chain

- Tensioning => Fig. 3

24 Sealing bush

- Renew if damaged
- Insert in sealing flange first
- Coat with oil when installing

25 20 Nm

26 Oil pump

- Checking backlash
  => Fig. 1
- Checking axial clearance
  => Fig. 2

27 Oil pump cover with pressure relief valve

- Opening pressure: 4.0...5.0 bar
- Clean strainer if soiled

Protected by copyright. Copying for private or commercial purposes, in part or in whole, is not permitted unless authorised by Volkswagen AG. Volkswagen AG does not guarantee or accept any liability with respect to the correctness of information in this document. Copyright by Volkswagen AG.
satelettronica

28 Seal
- Renew

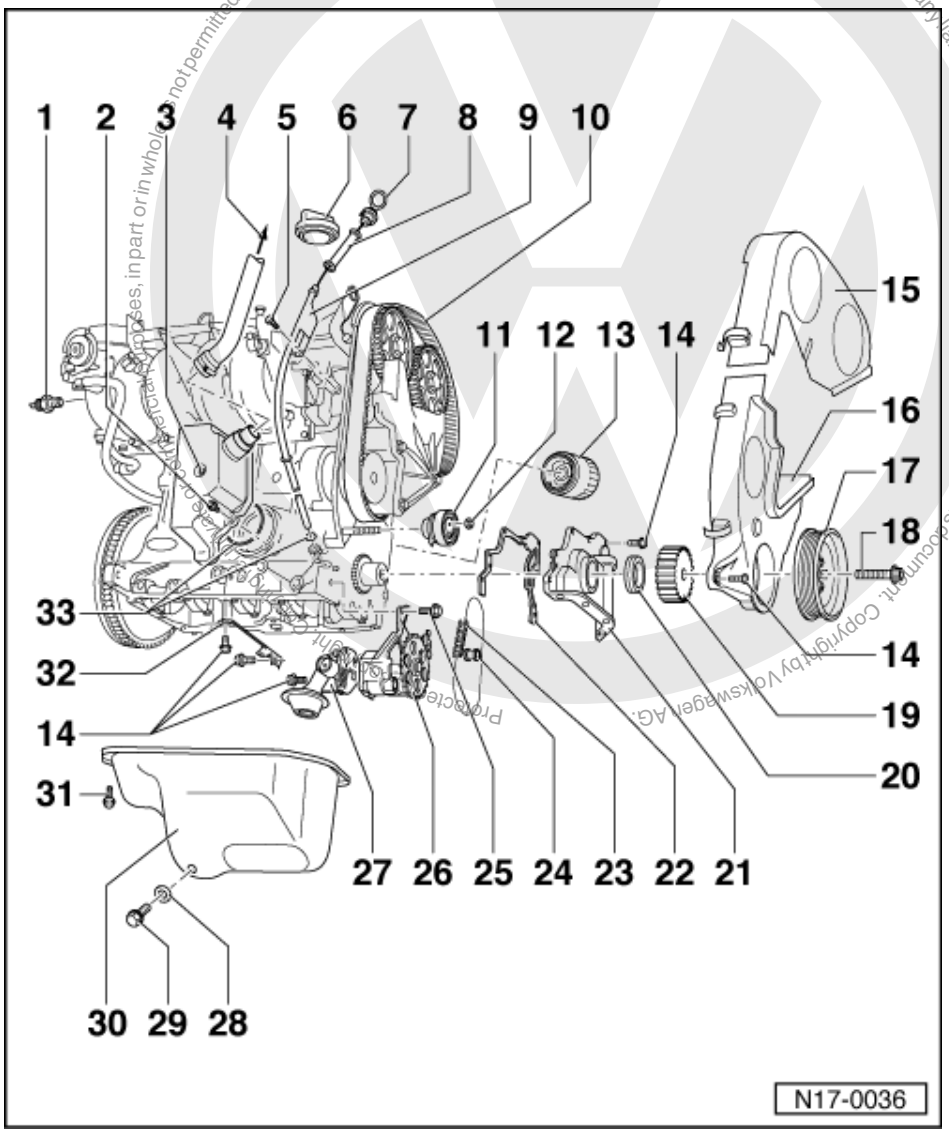

29 Oil drain plug, 30 Nm
30 Sump
- Removing and installing
  => Page 67

31 15 Nm
- Loosen and tighten the flywheel end bolts only with socket insert 3249

32 Bracket
33 O ring
- Renew

satelettronica

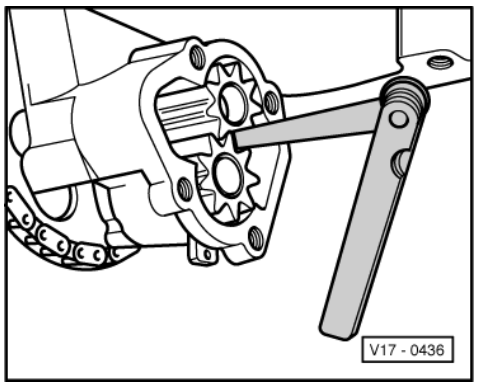

-> Fig. 1 Checking oil pump backlash

New: 0.05 mm

Wear limit: 0.20 mm

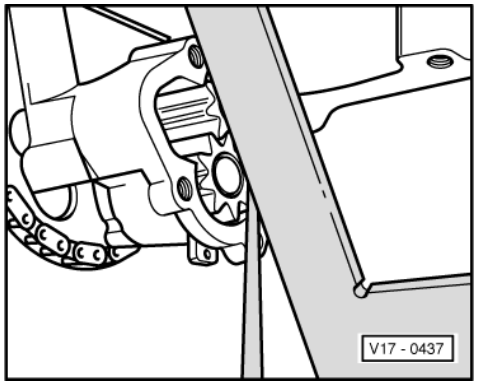

-> Fig. 2 Checking oil pump axial clearance

Wear limit: 0.15 mm

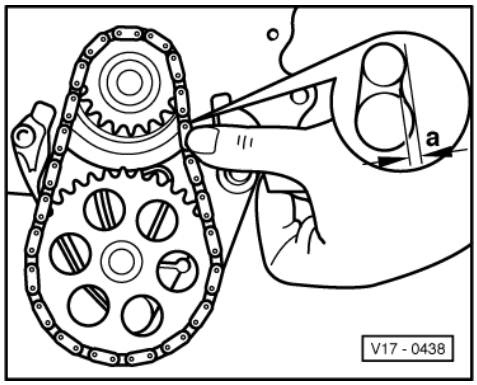

-> Fig. 3 Tensioning drive chain

Tension chain by moving oil pump. Check tension with light thumb pressure.
Checking: a = 4.0...5.0 mm
Setting: a = 3.5...4.5 mm

Protected by copyright. Copying for private or commercial purposes, in part or in whole, is not permitted unless authorised by Volkswagen AG. Volkswagen AG does not guarantee or accept any liability with respect to the correctness of information in this document. Copyright by Volkswagen AG.
satelettronica

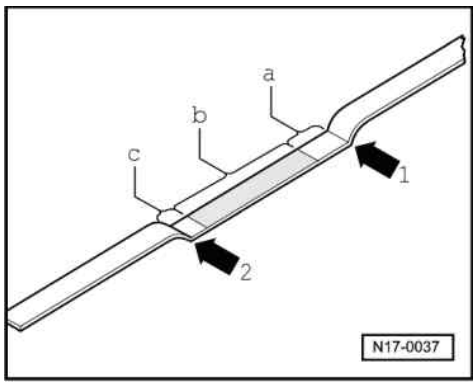

-> Fig. 4 Marking on oil dipstick

1 - max. mark
2 - min. mark
a - Area above hatched field up to max. mark: Do not top-up with engine oil!
b - Oil level within hatched field: can be topped-up with engine oil
c - Area from min. mark up to hatched field: fill with max. 0.5 ltr. of engine oil!

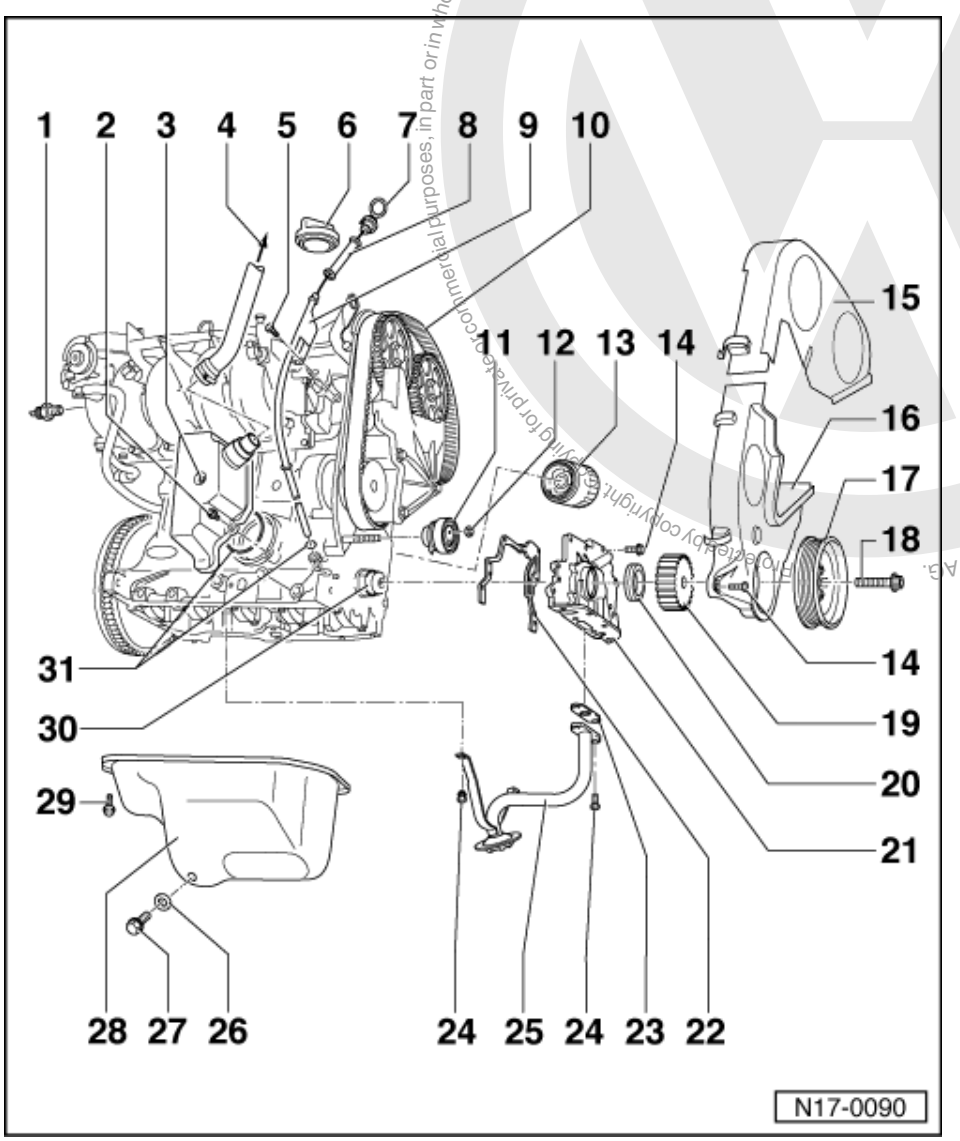

Reproduction for private or commercial purposes, in part or in whole, is not permitted unless authorised by Volkswagen AG. Volkswagen AG does not guarantee or accept any liability with respect to the correctness of information in this document. Copyright by Volkswagen AG.
satelettronica

Vehicles with Duo-centric oil pump

1 0.25 bar oil pressure switch (F22), 25 Nm
- Identification: blue
- Checking => Page 72
- If sealing ring is leaking nip open and replace.

2 10 Nm

3 Oil separator

4 To air cleaner

5 20 Nm

6 Cap
- Renew seal if damaged

7 Dipstick
- The oil level must not be above the max. mark!
- Marking => Fig. 4

8 Guide
- Pull off to draw out oil

9 Guide tube

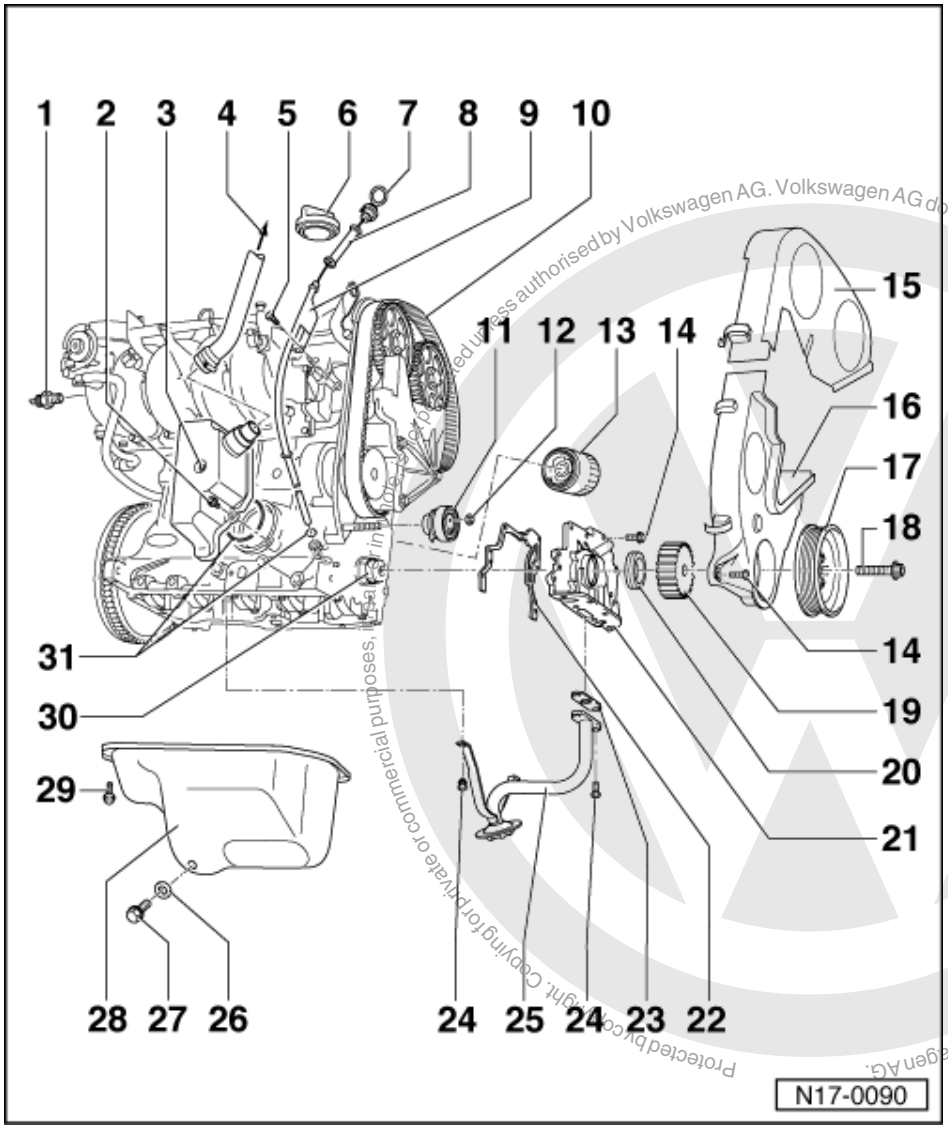

10 Toothed belt
- Removing and installing => Page 18

satelettronica

- Check for wear
- Do not kink

11 Tensioner

- Tensioning toothed belts
  => Page 18

12 20 Nm

13 Oil filter

- Loosen on hexagon
- Tighten by hand
- Observe installation instructions on oil filter

14 8 Nm

15 Toothed belt guard - upper part

16 Toothed belt guard - lower part

17 Belt pulley

- When installing note fixing arrangement
- Removing and installing ribbed belt => Page 17

Protected by copyright. Copying for private or commercial purposes, in part or in whole, is not permitted unless authorised by Volkswagen AG. Volkswagen AG does not guarantee or accept any liability with respect to the correctness of information in this copy.

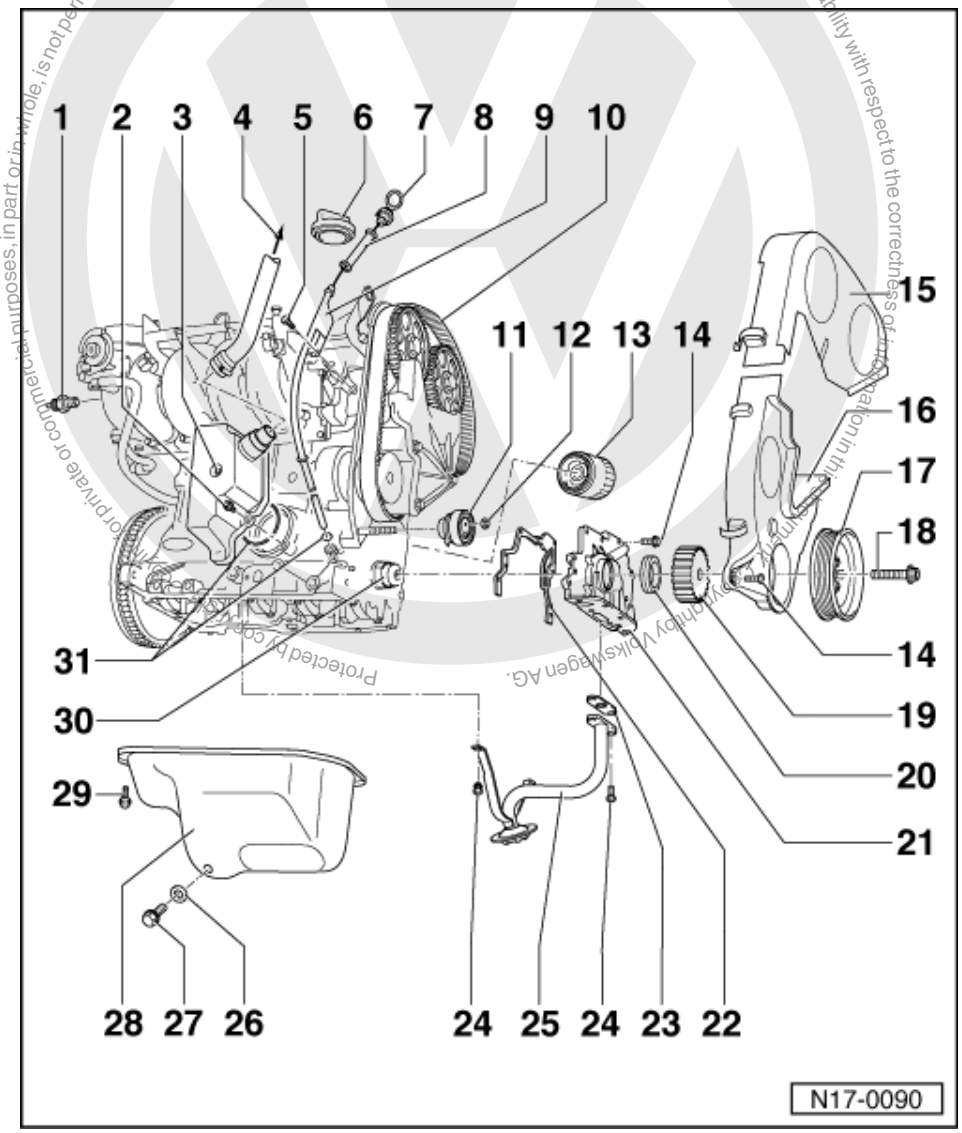

18 90 Nm + 1/4 turn (90 °) further

- Renew
- Oil threads
- The turning further can be done in several stages
- The turning further angle can be measured with a commercial protractor e.g. Hazet 6690
- The turning further can be done in several stages
- The turning further angle can be measured with a commercial protractor e.g. Hazet 6690

satelettronica

Volkswagen AG. Volkswagen AG does not guarantee or accept any liability with respect to the correctness of information in this document. Copyright by Volkswagen AG. Photocopy, copying, copyright, copying for private or commercial purposes, in part or in whole, is not permitted unless authorised by Volkswagen AG.

19 Crankshaft toothed belt sprocket

20 Oil seal

- Renewing => Page 26

21 Oil pump

- Only renew complete
- When installing note follower on crankshaft => Page 67 , item 30
- Must be located on dowel sleeves
- Removing and installing => Page 69

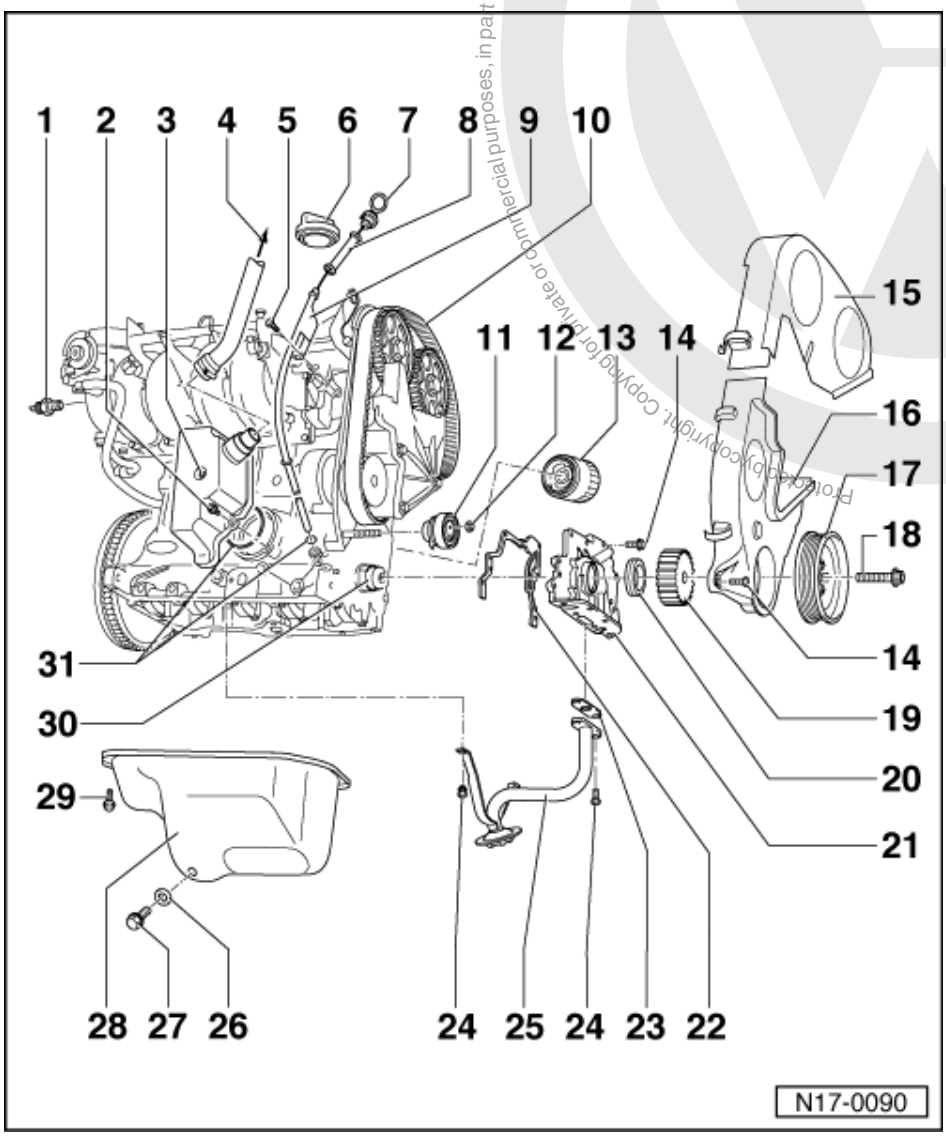

22 Gasket

- Metal gasket
- Renew

23 Gasket

24 10 Nm

25 Suction pipe

- Clean strainer if soiled

26 Seal

- Renew

27 Oil drain plug, 30 Nm

28 Sump

- Removing and installing engines with liquid gasket

satelettronica

=> Page 67
- Clean sealing surface before installing
- Install with silicone sealant
  D 176 404 A2
  => Page 67

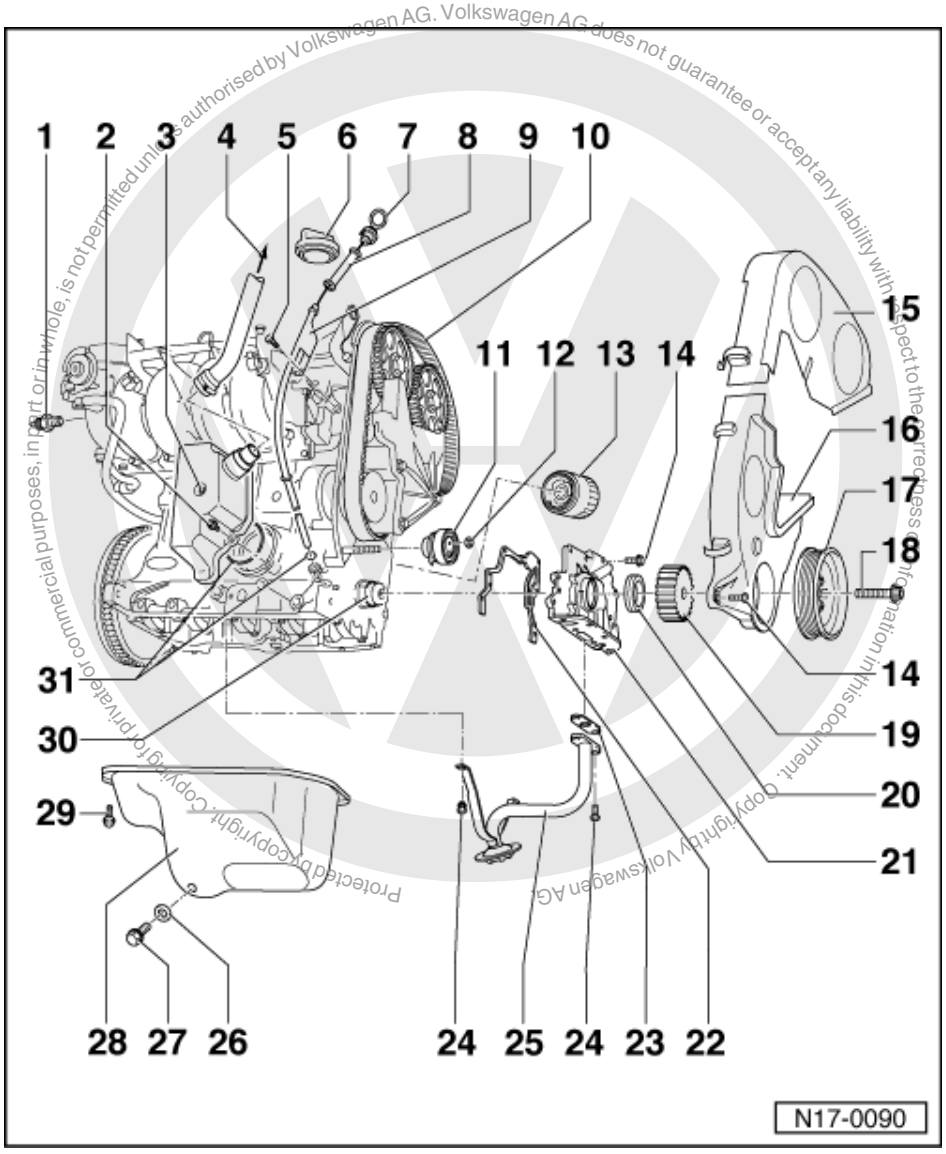

29 15 Nm
- On aluminium block: Renew bolts (coated with sealant)
- Loosen and tighten the flywheel end bolts only with socket insert 3249

30 Follower
- Coat with oil before installing oil pump

31 O ring
- Renew

1.2 - Removing and installing oil sump

Special tools, workshop equipment, testers, measuring instruments and auxiliary items required
- Socket 3249
- Hand drill with plastic brush
- Flat scraper
- Silicone sealant D176404 A2

satelettronica

Protected by copyright. Copyright by Volkswagen AG. Volkswagen AG does not guarantee or accept any liability with respect to the correctness of information in this document. Copyright by Volkswagen AG. Reproduction or in part is not permitted unless authorised by Volkswagen AG. For private or commercial purposes, in part or in whole, is not permitted unless authorised by Volkswagen AG.

- Torque wrench V.A.G 1331 (5...50 Nm)

Work sequence

- Drain engine oil.
- Remove ribbed belt guard and the cable guide from the sump.
- Remove front exhaust pipe from exhaust manifold.
- Unbolt right-hand drive shaft at gearbox.

=> Running gear; Repair group 40; Servicing front suspension; Removing and installing wheel bearing, suspension strut and drive shaft Servicing front suspension Removing and installing wheel bearing, suspension strut and drive shaft

- Remove cover plate for flywheel.
- Unbolt sump sealed with liquid gasket.
- Remove sump, it may be necessary to release sump by tapping lightly with a rubber head hammer.
- Remove sealant residue on cylinder block with a flat scraper.

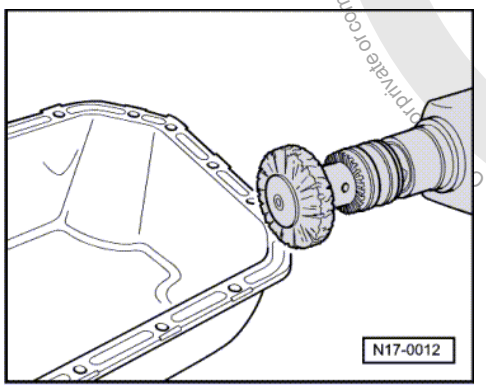

- -> Remove sealant residue on the sump with a rotating brush, e.g. a hand drill with a plastic brush (wear protective glasses).
- Clean sealing surface, must be free of oil and grease.

Notes:

- Note the use by date of the sealant.
- Sump must be installed within 5 minutes of applying silicone sealing compound.
- Sump can be offered up easier and with greater security if, for guide purposes, M6 studs are inserted into the cylinder block flange at two positions.

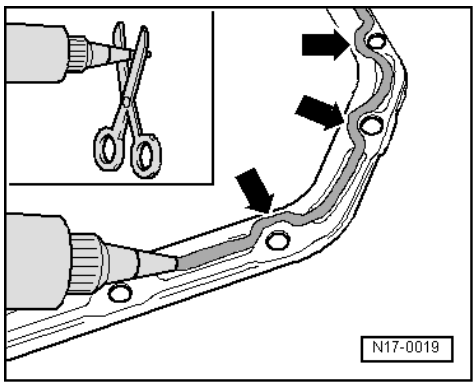

- -> Cut-off tube nozzle at forward marking (nozzle approx. 3 mm ø).
- Apply silicone sealing compound, as shown, to clean sump sealing surface. Sealing compound bead must be:
  - 3...4 mm thick
  - and run on inside of bolt holes -arrows-.

satelettronica

Note:

The sealing compound bead must not be thicker, otherwise excessive sealing compound will enter the sump and may block the oil suction pipe strainer.

- Install sump immediately and tighten all sump bolts lightly.
- Tighten sump bolts to
  15 Nm.

Note:

After installing sump the sealant must be allowed to dry for approx. 30 minutes before engine oil is filled.

1.3 - Removing and installing Duo-centric oil pump

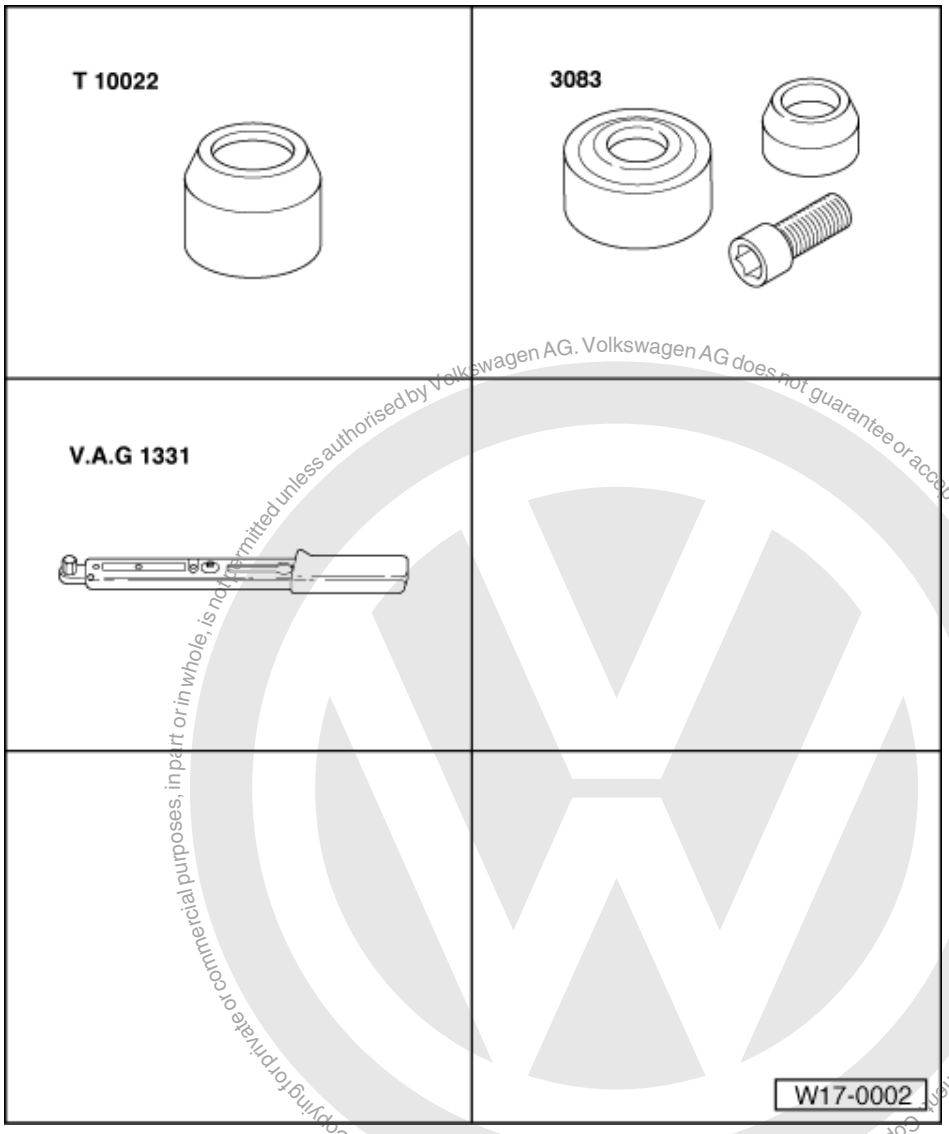

Protected by copyright. Copying for private or commercial purposes, in part or in whole, is not permitted unless authorised by Volkswagen AG. Volkswagen AG does not guarantee or accept any liability with respect to the correctness of information in this document. Copyright by Volkswagen AG.

satelettronica

Special tools, workshop equipment, test and measuring appliances and aux. items required

- T10022 Sleeve
- 3083 Oil seal fitting tool

- V.A.G 1331 Torque wrench (5...50 Nm)

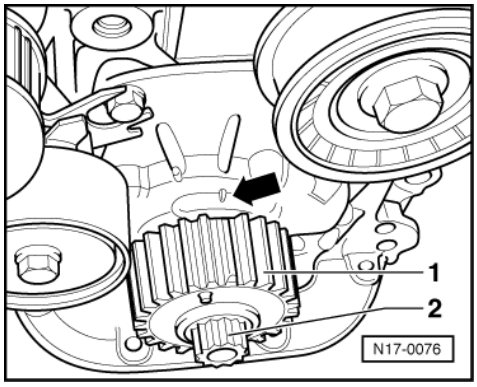

Removing

- Remove toothed belt => Page 18 , Removing, installing and tensioning toothed belt.
- -> Secure crankshaft toothed belt -1- to crankshaft with old securing bolts -2- and two washers.
- Position crankshaft at TDC No. 1 cylinder:

  The tooth ground down on the toothed belt sprocket must align with mark on the oil pump -arrow-.

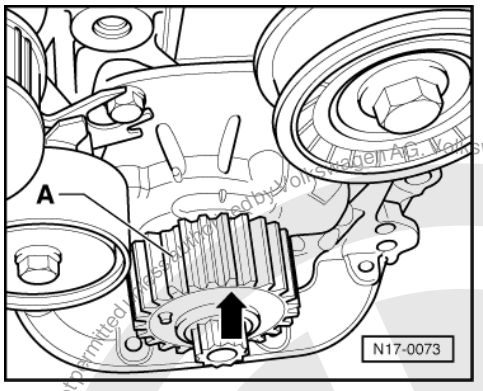

- -> Turn crankshaft/toothed belt sprocket three teeth anti-clockwise away from TDC:

  The third tooth -arrow- to the right of the tooth ground down -A- on the toothed belt sprocket must align with TDC mark on the oil pump housing.

Note:

This procedure moves the crankshaft to the correct installation position for the oil pump. One of the follower polygon cams on the crankshaft is uppermost.

- Loosen securing bolt from crankshaft/toothed belt sprocket.

- Remove crankshaft toothed belt sprocket and tensioning roller.
- Remove sump => Page 67 .
- Remove suction pipe => Page 66 , item 25 .
- Remove oil pump.
- Remove gasket.
- Remove sealant remnants on cylinder block with a flat scraper.
- Clean sealing surfaces, they must be oil and grease free.

Protected by copyright. Copyright by Volkswagen AG.
Copyright by Volkswagen AG. Volkswagen AG does not guarantee or accept any liability with respect to the correctness of information in this document.
satelettronica

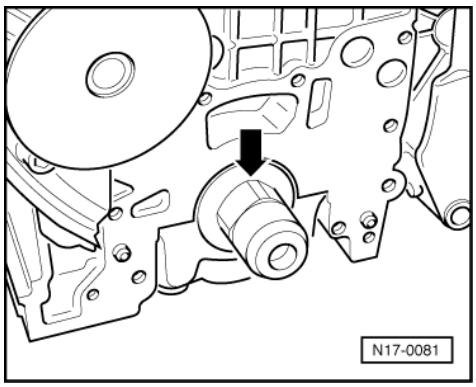

Installing

Conditions

- -> One of the follower polygon cams -arrow- on the crankshaft is uppermost.

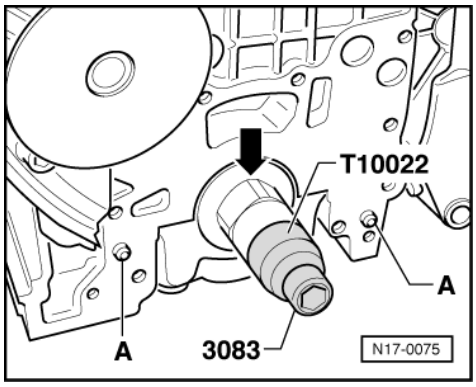

Work sequence

- -> Fit sleeve T10022 and hexagon socket head bolt from 3083 onto crankshaft and tighten hand tight.
- Fit new gasket onto guide pins -A-.

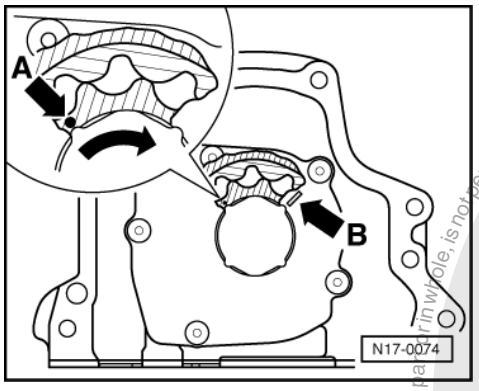

- -> Position one of the oil pump inner rotor markings arrow -A- on installation position mark arrow -B- on oil pump housing cover.
- Coat the four crankshaft follower polygon cams with oil.
- Lightly oil sealing lip of oil pump oil seal.
- Guide oil pump carefully onto crankshaft follower polygon cams.
- Align inner rotor to crankshaft follower polygon cams by turning slightly if necessary.
- Then slide oil pump carefully onto guide pins.
- Install oil pump => Page 64 , item 21 .
- Remove sleeve T10022.
- Install suction pipe => Page 66 , item 25 .
- Install oil sump => Page 67 .

satelettronica
Protected by copyright. Copying for private or commercial purposes, partly or in whole, is not permitted unless authorised by Volkswagen AG. Volkswagen AG does not guarantee or accept any liability with respect to the correctness of information in this document. Copyright by Volkswagen AG.

- Install toothed belt sprocket and tensioning roller, install and tension toothed belt => Page 18 , Removing, installing and tensioning toothed belt.

1.4 - Checking oil pressure and oil pressure switch

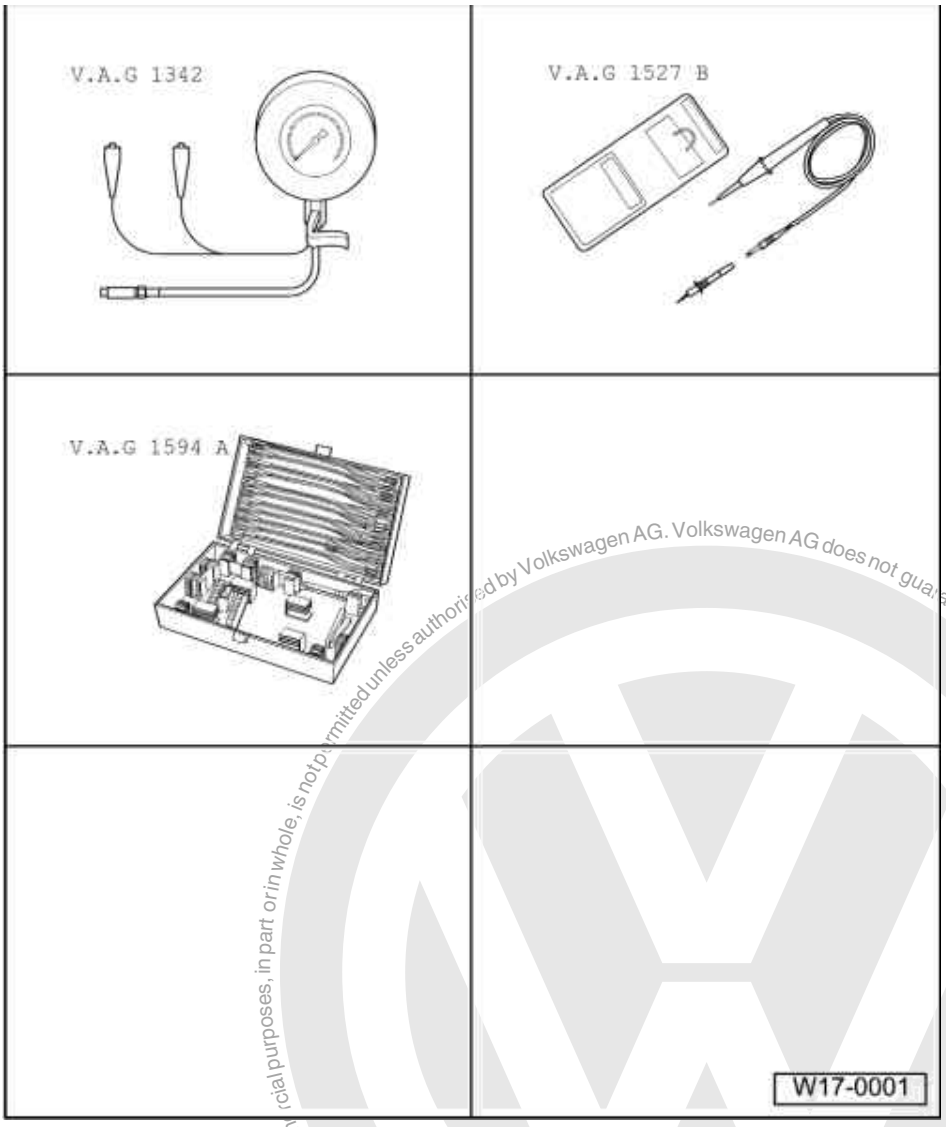

Special tools, workshop equipment, test and measuring appliances and aux. items required

- V.A.G 1342 Oil pressure tester
- V.A.G 1527 B Diode test lamp
- V.A.G 1594 A Adapter set

Protected by copyright. Copying for private or commercial purposes, in part or in whole, is not permitted unless authorised by Volkswagen AG. Volkswagen AG does not guarantee or accept any liability with respect to the correctness of information in this document. Copyright by Volkswagen AG.
satelettronica

Vehicles ▸ 08.97

Test sequence

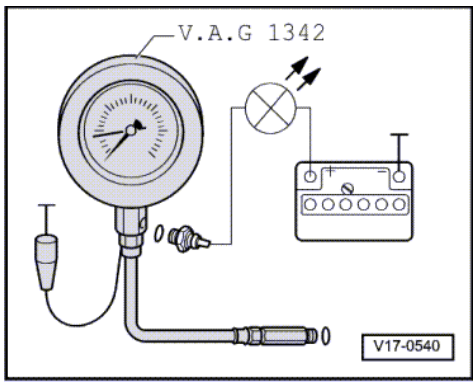

- -> Remove oil pressure switch (F22) and screw into tester.
- Screw tester into the cylinder head in place of the oil pressure switch.
- Connect brown wire of tester to earth (-).
- Connect diode test lamp V.A.G 1527 using aux. cables from V.A.G 1594 to battery positive (+) and oil pressure switch. LED must light up.
- Start engine and increase speed slowly.
  At
  0.15...0.35 bar
  the LED must go out, otherwise renew oil pressure switch.
- Increase engine speed further.
  At 2000 rpm and an oil temperature of 80 °C the oil pressure should be at least 2.0 bar.

Vehicles 09.97 ▸

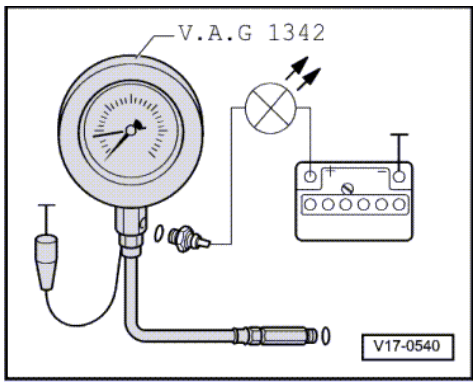

Note:

Functional check and servicing the optical and acoustic oil pressure warning:

=> Current flow diagrams, Electrical fault finding and Fitting locations

- -> Remove 1.4 bar oil pressure switch (F1) (black insulation) and screw into test unit.
- Screw tester into the cylinder head in place of the oil pressure switch.
- Connect brown wire of tester to earth (-).
- Connect diode test lamp V.A.G 1527 B using aux. cables from V.A.G 1594 A to battery positive (+) and oil pressure switch. LED must not light up.
- If the LED lights up, renew 1.4 bar oil pressure switch (F1) .

When the LED does not light up:

- Start engine and run at idling speed
  at
  1.2...1.6 bar
  the LED must light up, otherwise renew 1.4 bar oil pressure switch (F1).
- Increase engine speed further.

satelettronica
Protected by copyright. Copying for private or commercial purposes, in part or in whole, is not permitted unless authorised by Volkswagen AG. Volkswagen AG does not guarantee or accept any liability with respect to the correctness of information in this document. Copyright by Volkswagen AG.

At 2000 rpm and an oil temperature of 80 °C the oil pressure should be at least 2.0 bar.

Protected by copyright. Copying for private or commercial purposes, in part or in whole, is not permitted unless authorised by Volkswagen AG. Volkswagen AG does not guarantee or accept any liability with respect to the correctness of information in this document. Copyright by Volkswagen AG.

satelettronica

19 - Cooling system

1 - Removing and installing parts of cooling system

1.1 - Removing and installing parts of cooling system

Notes:

- When the engine is warm the cooling system is under pressure. If necessary release pressure before commencing repair work.
- Hoses are secured with spring-type clips. In cases of repair only use spring-type clips.
- V.A.G 1921 pliers are recommended when installing spring-type clips.

Draining and filling with coolant=> Page 83

Coolant mixture ratios => Page 83 , draining and filling with coolant

Carry out cooling system leakage check with V.A.G 1274 and 1274/3.

Protected by copyright. Copying for private or commercial purposes, in part or in whole, is not permitted unless authorised by Volkswagen AG. Volkswagen AG does not guarantee or accept any liability with respect to the correctness of information in this document. Copyright by Volkswagen AG.

satelettronica

1.2 - Parts of cooling system body side

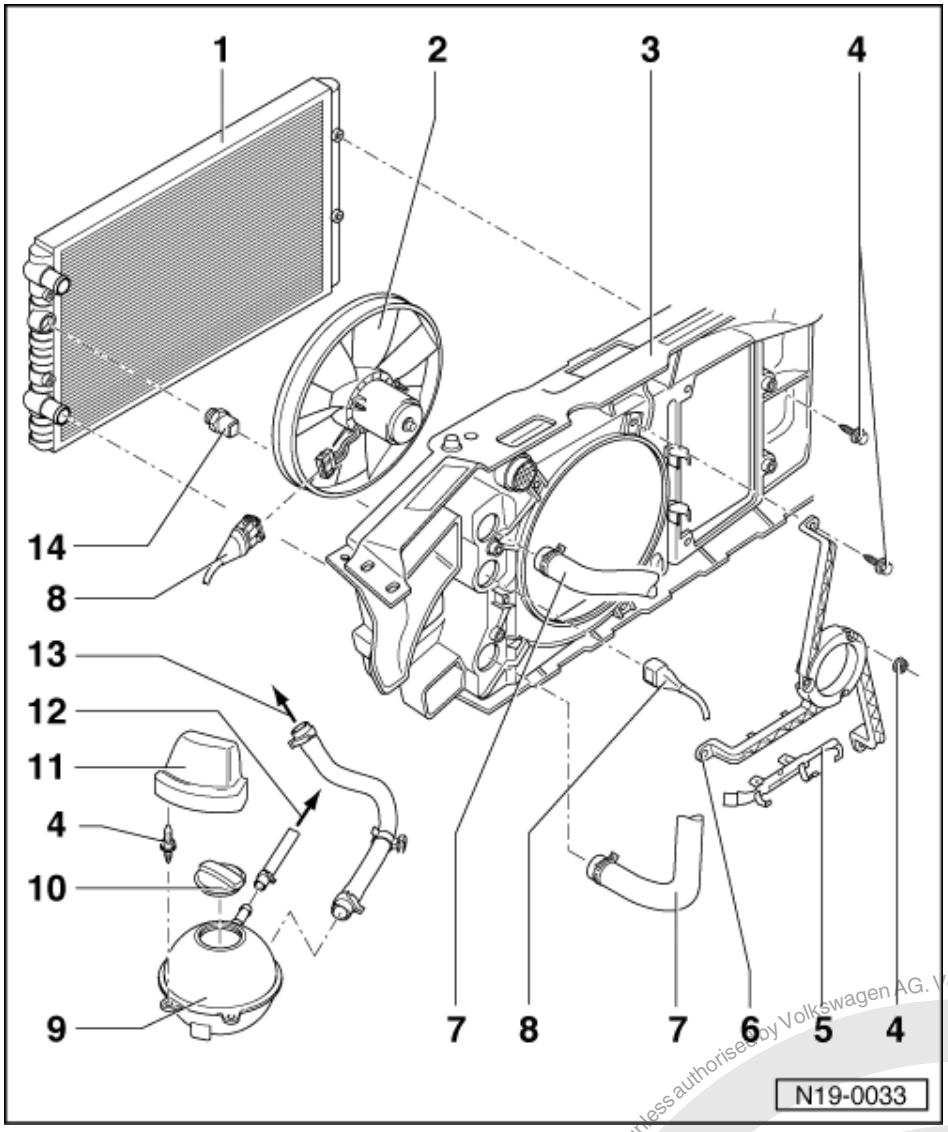

1 Radiator
- Removing and installing
  =>Page 84
- After replacing renew entire coolant

2 Radiator fan

3 Lock carrier

4 10 Nm

5 Cable retainer

6 Bracket
- For electric fan

7 Coolant hose
- Top: to thermostat housing
  =>Page 80 , Item 19
- Lower: to connection
  =>Page 78 , Item 3

Protected by copyright. Copying for private or commercial purposes, in part or in whole, is not permitted unless authorised by Volkswagen AG. Volkswagen AG does not guarantee or accept any liability with respect to the correctness of information in this document. Copyright by Volkswagen AG.
satelettronica

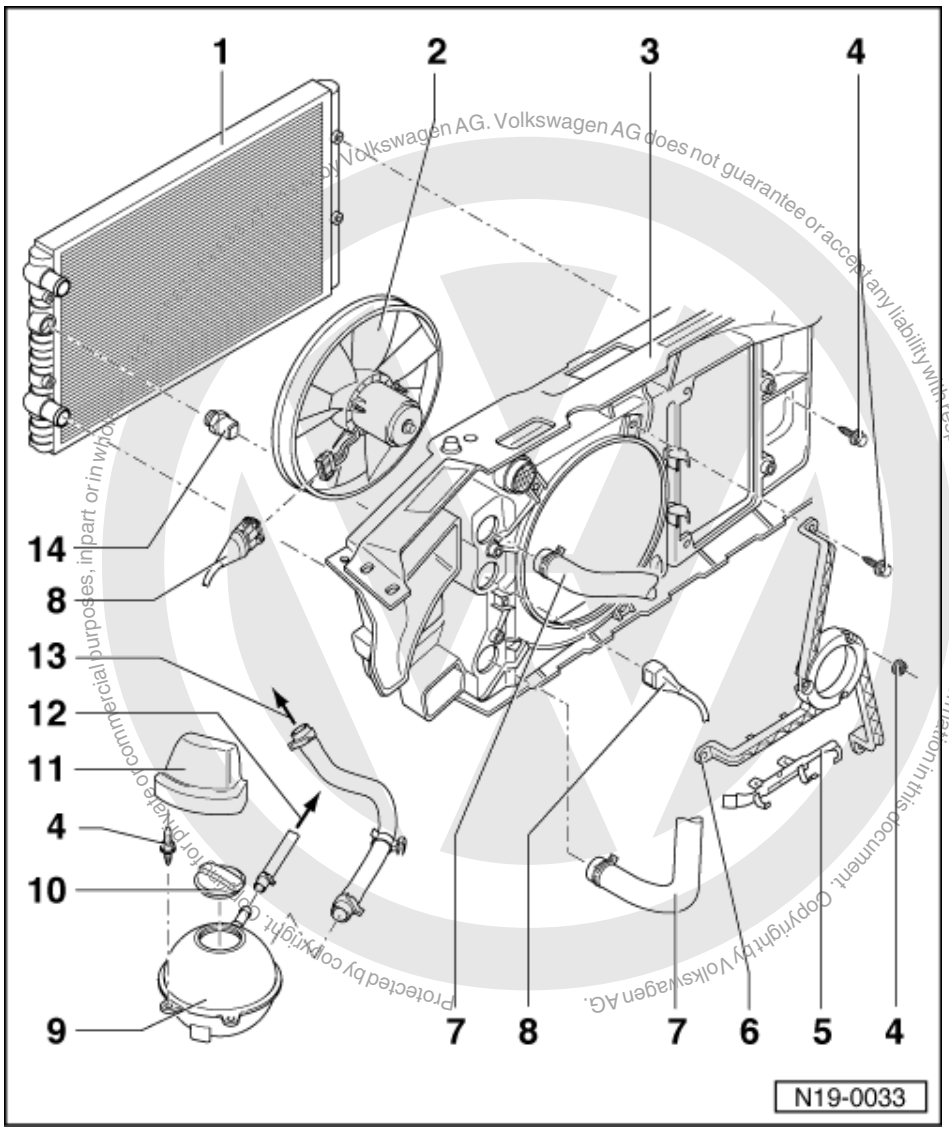

8 Connector
9 Expansion tank
10 Cap
- Check with V.A.G 1274 and 1274/4
- Test pressure 1.4...1.6 bar

11 Cover
12 To thermostat housing
- =>Page 79 , Item 7

13 To thermostat housing
- =>Page 79 , Item 9

14 Thermo switch (F18), 35 Nm
- For electric fan
- Switching temperatures:
  Stage 1
  on: 92...97 °C
  off: 84...91 °C
  Stage 2
  on: 99...105 °C
  off: 91...98 °C

satelettronica

1.3 - Parts of cooling system - engine side

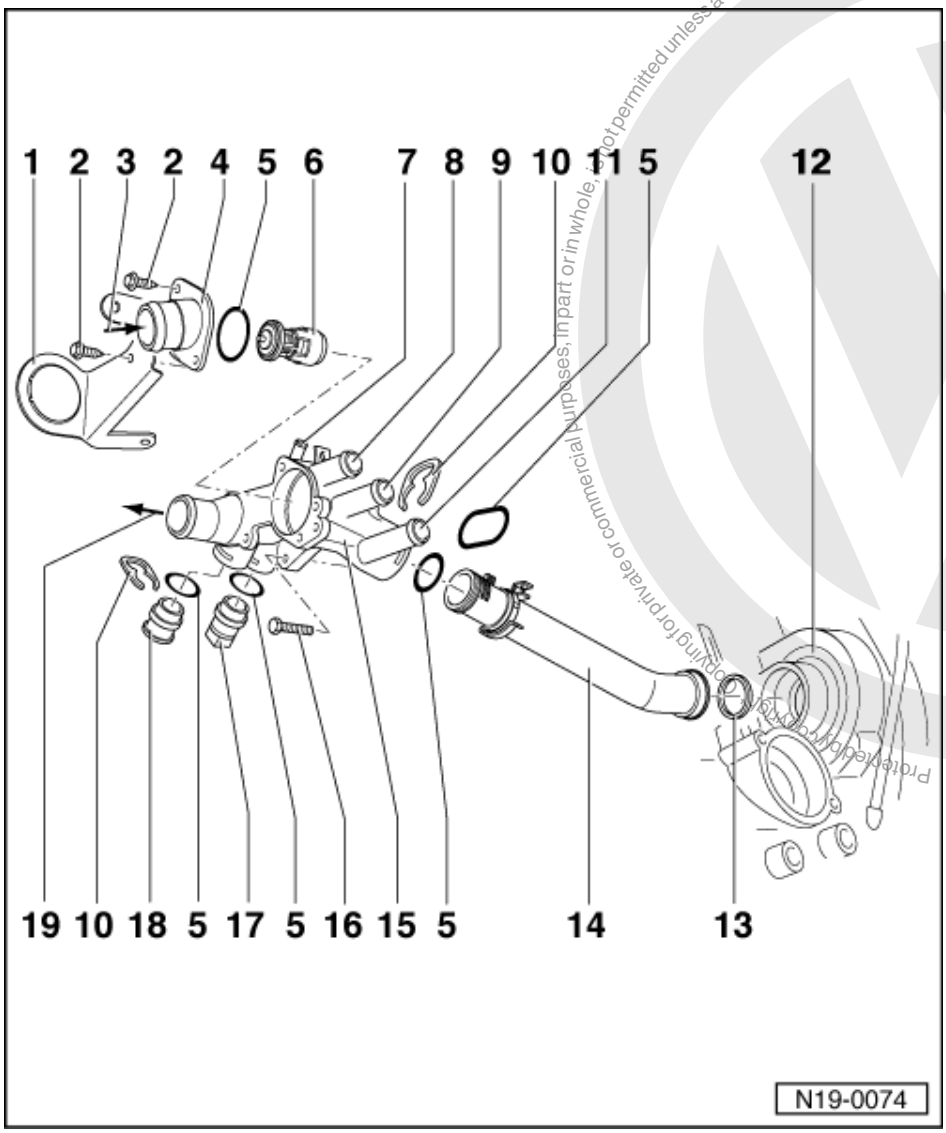

Volkswagen AG does not guarantee or accept any liability with respect to the correctness of information in this document. Copyright by Volkswagen AG.
Protected by copyright. Copying for private or commercial purposes, in part or in whole, is not permitted unless authorised by Volkswagen AG.
satelettronica

Thermostat side

1 Retainer
- For central connector

2 Self-tapping bolt

3 From bottom of radiator
- =>Page 76 , Item 7

4 Connection

5 O ring
- Renew

6 Coolant thermostat
- Checking operation: heat-up thermostat in water the thermo element pin must move out
- Temperature check: Opening starts (approx. 84 °C) and ends (approx. 98 °C) cannot be checked.

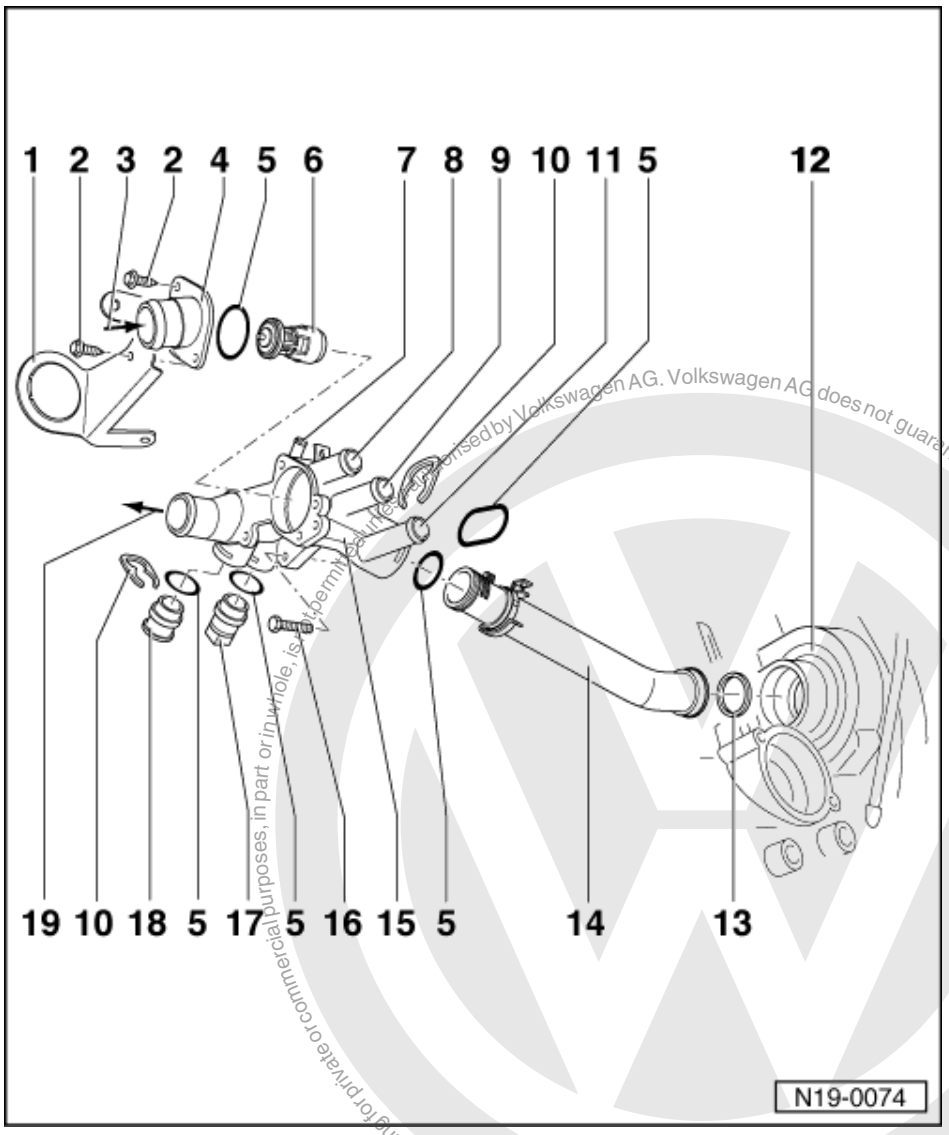

7 To expansion tank
- =>Page 77 , Item 12

8 To heat exchanger

9 From expansion tank
- =>Page 77 , Item 13

10 Retaining clip

11 From heat exchanger

12 Coolant pump housing on cylinder block

13 Seal
- Renew

14 Coolant pipe

15 Thermostat housing

16 10 Nm

Protected by copyright. Copying for private or commercial purposes, in part or in whole, is not permitted unless authorised by Volkswagen AG. Volkswagen AG does not guarantee or accept any liability with respect to the correctness of information in this document. Copyright by Volkswagen AG.
satelettronica

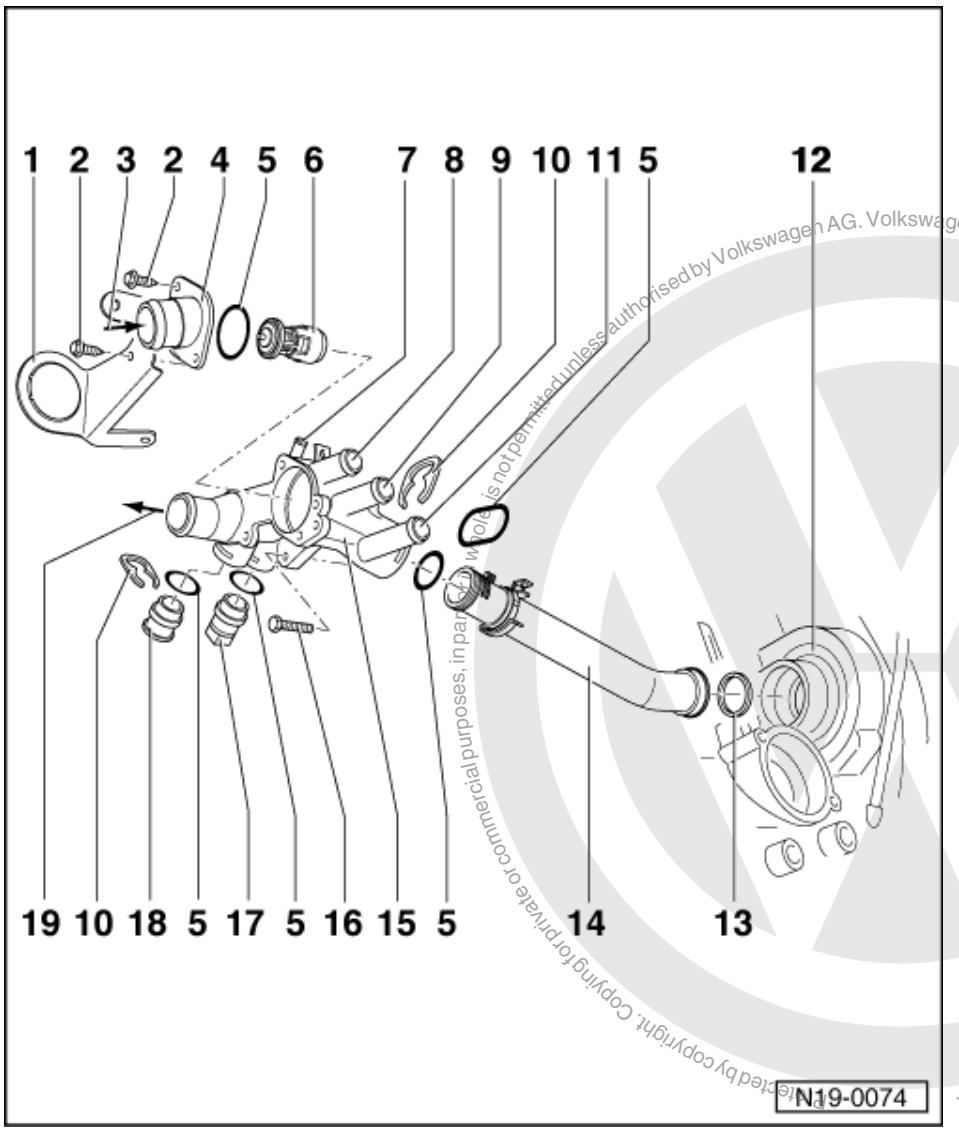

17 Coolant temperature sender (G62)
- With coolant temperature gauge sender (G2)

18 Sealing plug

19 To top of radiator
- =>Page 76 , Item 7

Copyright by Volkswagen AG. Volkswagen AG does not guarantee or accept any liability with respect to the correctness of information in this document. Copying for private or commercial purposes, in part or in whole is not permitted unless authorised by Volkswagen AG.
satelettronica

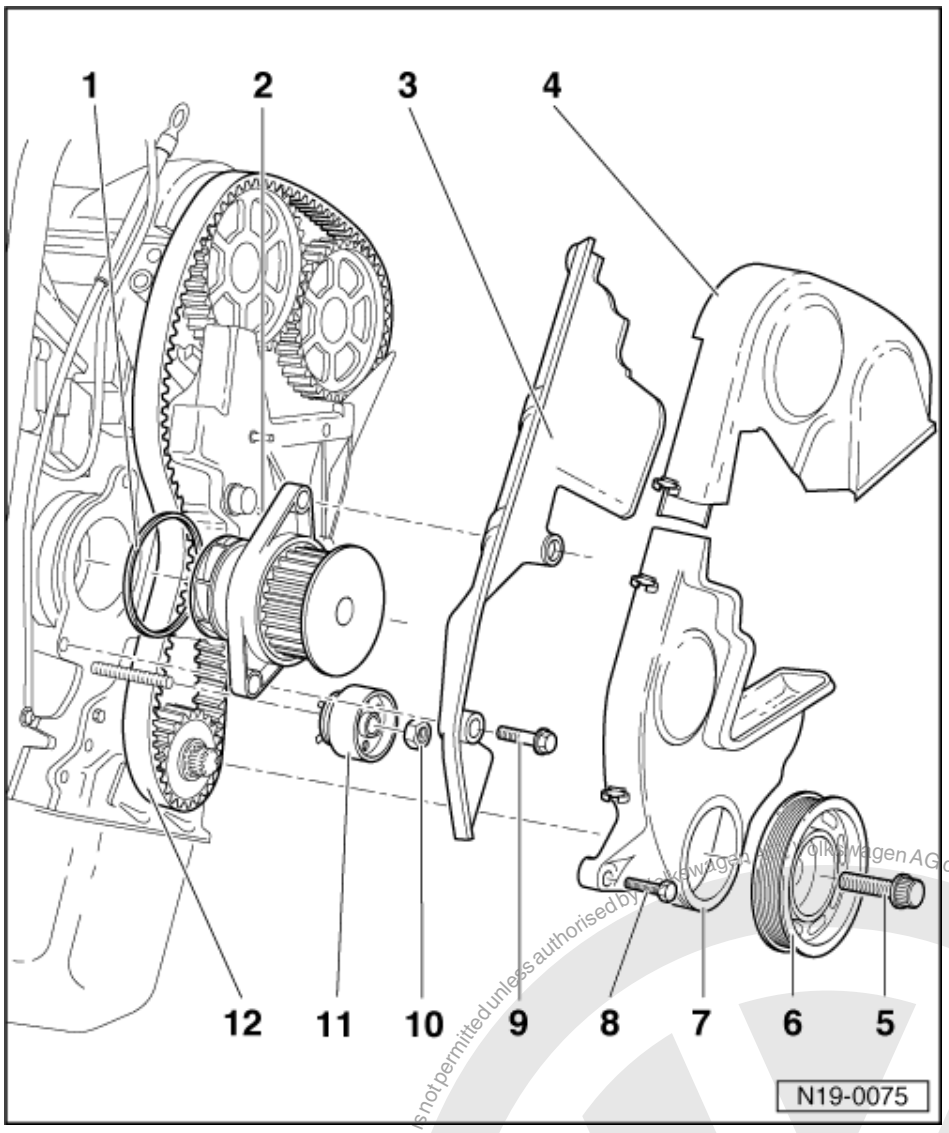

Coolant pump side

1 O-Ring
- If leaking and damaged renew

2 Coolant pump
- Check for ease of movement
- If damaged or leaking renew complete

3 Rear toothed belt guard

4 Toothed belt guard - upper part

5 90 Nm + 1/4 turn (90 °) further
- Renew
- Oil threads
- The turning further can be done in several stages
- The turning further angle can be checked with a commercial protractor e.g. Hazet 6690

Protected by copyright. Copying for private or commercial purposes, in part or in whole, is not permitted unless authorised by Volkswagen AG. Volkswagen AG does not guarantee or accept any liability with respect to the correctness of information in this document. Copyright by Volkswagen AG.
satelettronica

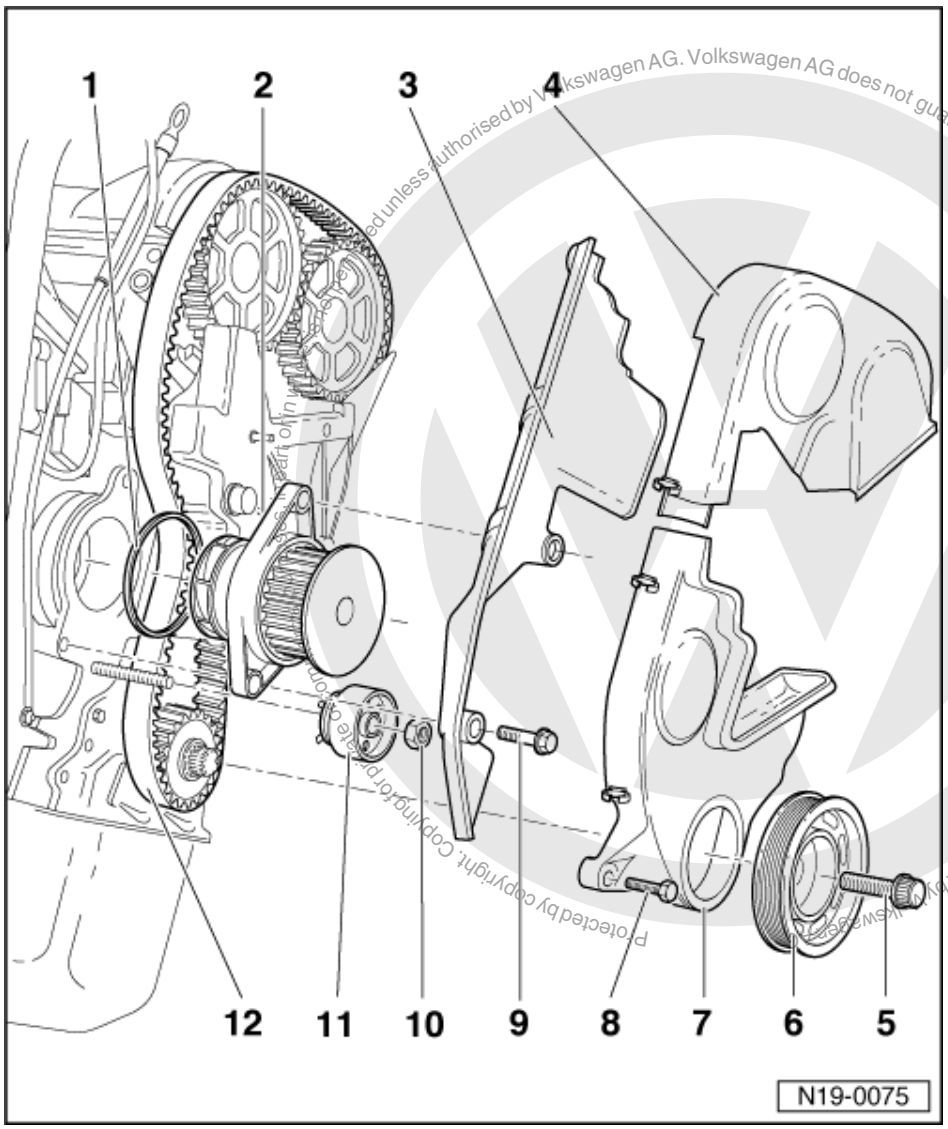

6 Belt pulley
- When installing note fixing arrangement
- Removing and installing ribbed belt => Page 17

7 Toothed belt guard - lower part

8 10 Nm

9 20 Nm

10 20 Nm

11 Tensioner
- Tensioning toothed belts => Page 18

12 Toothed belt
- Check for wear
- Do not kink
- Tensioning toothed belts => Page 18

satelettronica

1.4 - Draining and filling cooling system

Special tools, testers and auxiliary items

- Drip tray V.A.G 1306
- Pliers V.A.G 1921 for spring type clips
- Anti-freeze tester

Draining

- Open cap on coolant expansion tank.
- Drain coolant at lower hose on radiator.

Note:

Observe disposal regulations!

Filling

Notes:

- Coolant additive:
  ‣ approx. 06.96 G11 -coloured green-
  07.96 ‣ G 12 -coloured red-
- On no account must G 12 be mixed with other coolant additives!
- If the fluid in expansion tank is brown, G 12 has been mixed with other coolant. In this case the coolant must be changed.
- G 12 (G 11) and coolant additives marked "In accordance with TL VW 774 D (C)" prevent frost and corrosion damage, scaling and also raise boiling point of the coolant. For this reason the system must be filled all year round with frost and corrosion protection additives.
- Because of its high boiling point, the coolant improves engine reliability under heavy loads, particularly in countries with tropical climates.
- Protected against frost to about -25 °C (in arctic climatic countries to about -35 °C).
- The coolant concentration must not be reduced by adding water even in warmer seasons and in warmer countries. The anti-freeze ratio must be at least 40 %.
- If for climatic reasons a greater frost protection is required, the amount of G 12 can be increased, but only up to 60 % (frost protection to about -40 °C), as otherwise frost protection is reduced again and cooling effectiveness is also reduced.
- If radiator, heat exchanger, cylinder head or cylinder head gasket is replaced, do not reuse old coolant.
- When refilling the coolant system only use G 12.
- The frost and corrosion protection additive G 11 must only be used for topping-up purposes, when the cooling system is still filled with G 11.
  Identification: Green in colour

Recommended mixture ratios:

Frost protection to	Anti-freeze amount	G 121)	Water1)
-25 °C	40 %	2.25 l	3.35 l
-35 °C	50 %	2.8 l	2.8 l

1) The quantity of coolant can vary depending upon the vehicle equipment.

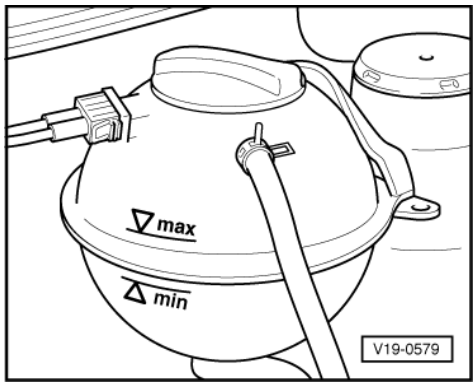

Copyright by Volkswagen AG. Volkswagen AG does not guarantee or accept any liability with respect to the correctness of information in this document. Copyright by Volkswagen AG. Protected by copyright. Copying for private or commercial purposes, in part or in whole, is not permitted unless authorised by Volkswagen AG.
satelettronica

- -> Fill with coolant slowly up to max. mark on expansion tank. Filling takes approx. 5 minutes.
- Fit expansion tank cap.
- Run engine until radiator fan cuts-in.
- Check coolant level and top-up if necessary. When the engine is at normal operating temperature, the coolant level must be on the max. mark and between the min. and max. marks when the engine is cold.

1.5 - Removing and installing radiator

Special tools, testers and auxiliary items

- Drip tray V.A.G 1306
- Pliers V.A.G 1921 for spring type clips

Removing

- First remove radiator grille and trim.
- Remove left-hand headlight:

=> Electrical system; Repair group 94; Servicing headlights. Servicing headlights.

- Drain coolant => Page 83
- Pull coolant hoses off radiator.
- Pull connectors off thermoswitch.
- Remove catch plate for bonnet lock.
- Remove radiator securing bolts and take out radiator to the front.

Vehicles with air conditioner:

- Observe additional information and removal work => Page 84 .

Installing

Installing is basically in the reverse order but note following:

- Filling with coolant => Page 83
- Electrical connections and routing:

=> Current flow diagrams, Electrical fault finding and Fitting locations

- Check headlight adjustment and adjust if necessary:

=> Maintenance

Additional information and removal work on vehicles with air conditioner

Warning! The air conditioner refrigerant circuit must not be opened.

Note:

To prevent damage to condenser also to the refrigerant pipes/hoses, ensure that the pipes and hoses are not stretched, kinked or bent.

- Remove skirt from front bumper.
- Remove retaining clamp(s) from refrigerant pipes.
- Remove condenser from radiator and pull forward as far as is possible.
- Lift radiator out carefully, forwards.

satelettronica

- Secure condenser to body so that refrigerant pipes/hoses are not stressed.

Protected by copyright. Copying for private or commercial purposes, in part or in whole, is not permitted unless authorised by Volkswagen AG. Volkswagen AG does not guarantee or accept any liability with respect to the correctness of information in this document. Copyright by Volkswagen AG.

satelettronica

20 - Fuel supply system

Protected by copyright. Copying for private or commercial purposes, in part or in whole, is not permitted unless authorised by Volkswagen AG. Volkswagen AG does not guarantee or accept any liability with respect to the correctness of information in this document. Copyright by Volkswagen AG.

1 - Removing and installing parts of fuel supply system

1.1 - Removing and installing parts of fuel supply system

Notes:

- Always replace spring-type clips with screw or windlass type clips.
- Fuel hoses in engine compartment must only be secured with spring-type clips. The use of clamp or screw-type clips is not permissible.
- V.A.G 1921 pliers are recommended when installing spring-type clips.

Observe safety precautions
=> Page 92

Observe rules for cleanliness
=> Page 93

Adjusting throttle cable => Page 99

Removing and installing accelerator pedal => Page 92 , Fig. 3

satelettronica

1.2 - Removing and installing fuel tank with its attachments

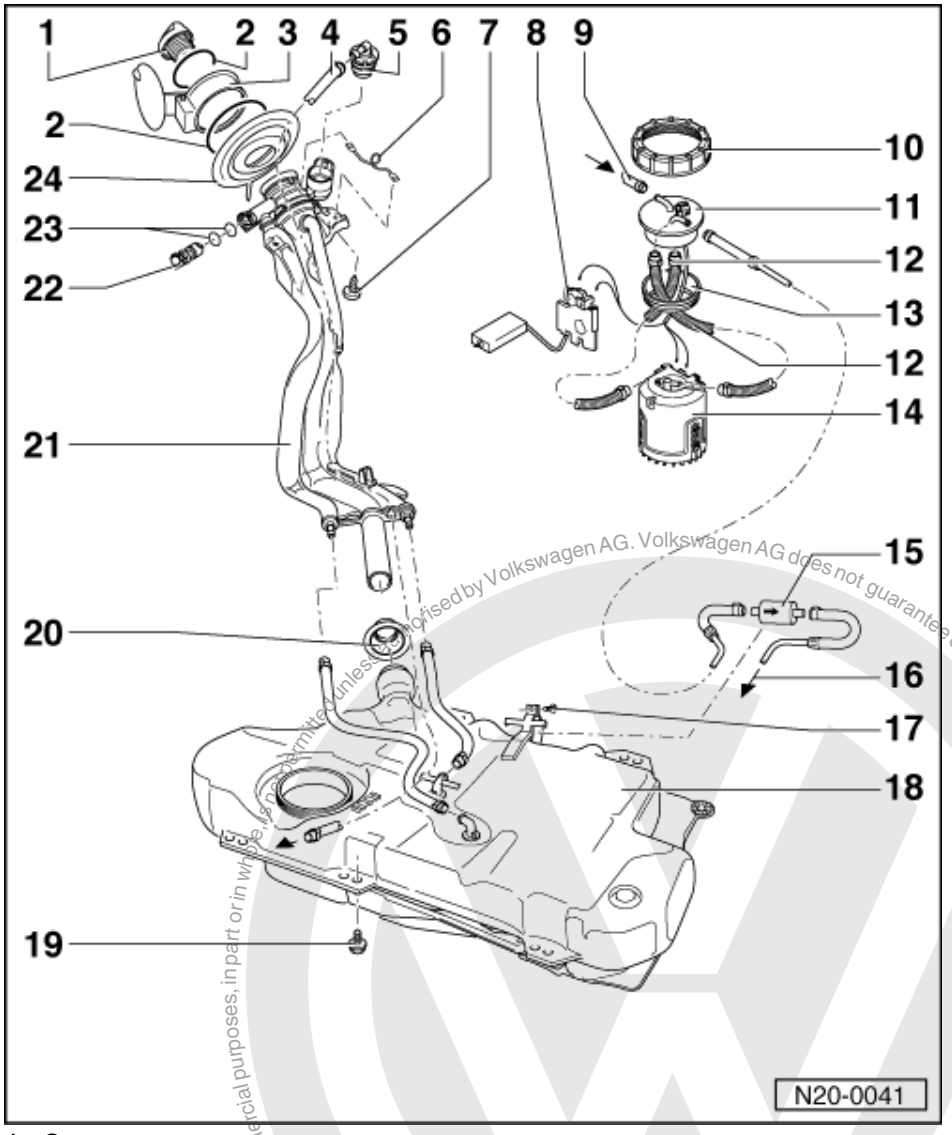

1 Cap
2 Retaining ring
3 Tank flap unit
- Removing and installing

=> General body repairs; Repair group 55; fuel flap unit fuel flap unit

4 Vent pipe
- To activated charcoal filter
  =>Page 100 , Item 5

5 Gravity/overflow valve
- To remove, release locking lug and unclip valve upwards out of filler neck
- Check valve for through-flow
  valve vertical: open,
  valve tilted 90 °: closed

Protected by copyright. Copyright by Volkswagen AG.
Copyright by Volkswagen AG. Volkswagen AG does not guarantee or accept any liability with respect to the correctness of information in this document.
Reproduction, in part or in whole, is prohibited unless authorised by Volkswagen AG.
satelettronica

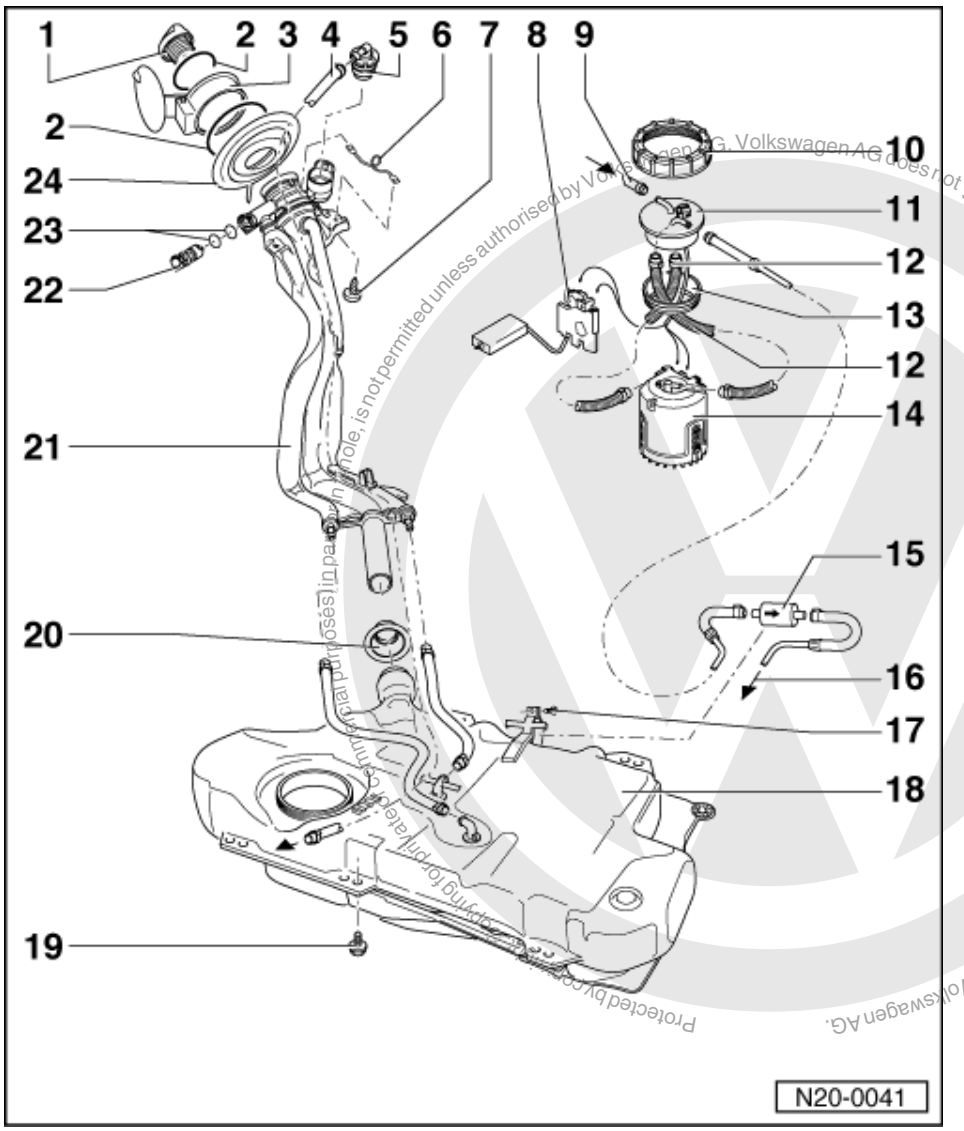

6 Earth connection
7 4 Nm
8 Fuel gauge sender
- Adjusting:

=> Current flow diagrams, Electrical fault finding and Fitting locations

9 Return hose/line
- Blue or blue markings
- From fuel manifold

=> Repair group 24; mixture preparation, injection mixture preparation, injection

10 Union nut, 75 Nm
- Remove and install with 3217

11 Flange
- Note fitting position on fuel tank => Fig. 1

12 Corrugated tube
- Must not contact fuel tank, otherwise pump noises will be transferred

satelettronica

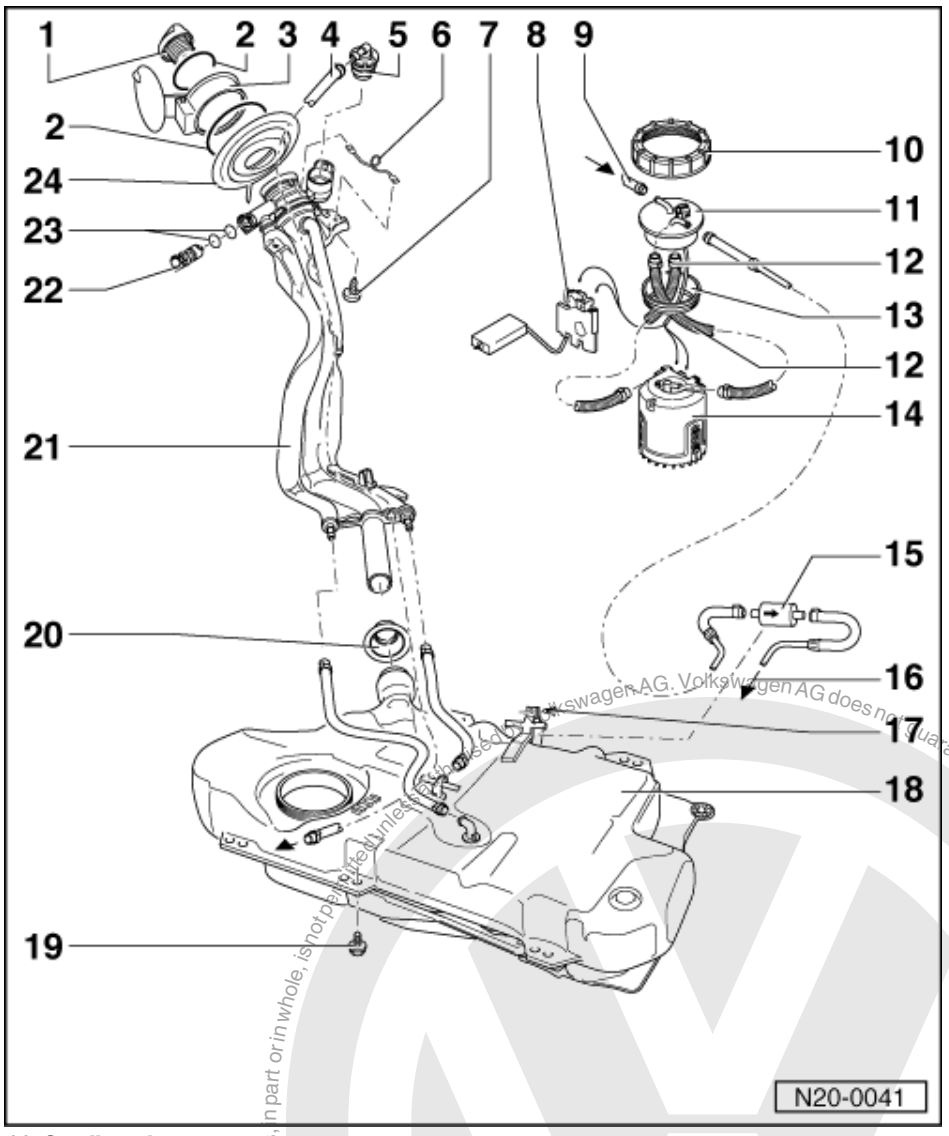

13 Sealing ring

- Coat with fuel when installing
- Renew if damaged

14 Fuel delivery unit

- Removing and installing => Page 97
- Checking fuel pump => Page 93

Note:

After completing work on fuel delivery unit or fuel gauge sender ensure that the corrugated tubing between delivery unit and flange does not contact the fuel tank (transfer of pump noises).

15 Fuel filter

- Fitting position: Arrow points in through-flow direction

Protected by copyright. Copyright by Volkswagen AG.
Volkswagen AG does not guarantee or accept any liability with respect to the correctness of information in this document. Copyright by Volkswagen AG.
satelettronica

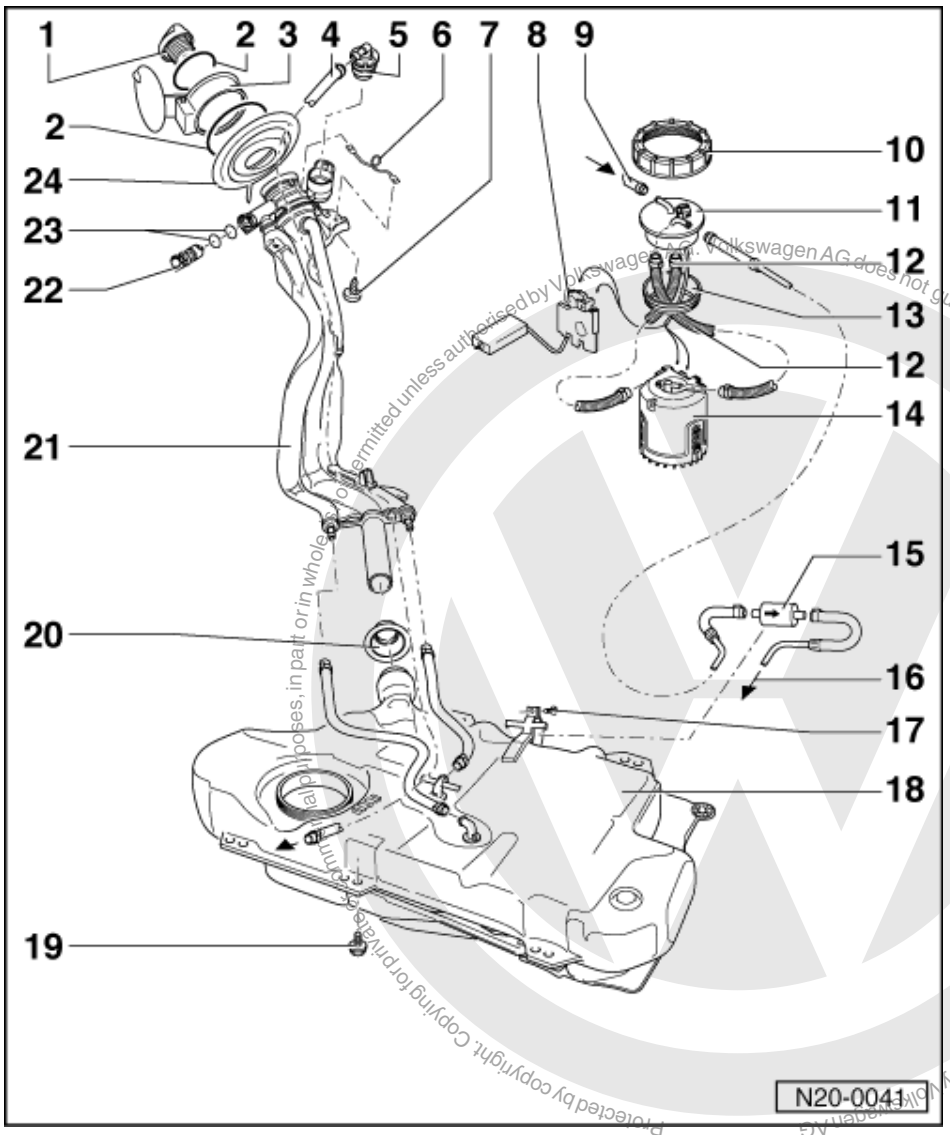

16 Supply pipe
- Black
- To fuel manifold

=> Repair group 24; mixture preparation, injection mixture preparation, injection

17 3 Nm
18 Fuel tank
- Removing and installing
  => Page 98
- Press clamping washer from heat shield tightly onto pins on vehicle floor

19 25 Nm
20 Sealing boot
- After installing filler pipes fit over fuel tank connections, having turned boot inside out

21 Filler pipes
- With non-return valve

Protected by copyright. Copying for private or commercial purposes, in part or in whole, is not permitted unless authorised by Volkswagen AG. Volkswagen AG does not guarantee or accept any liability with respect to the correctness of information in this document. Copyright by Volkswagen AG
satelettronica

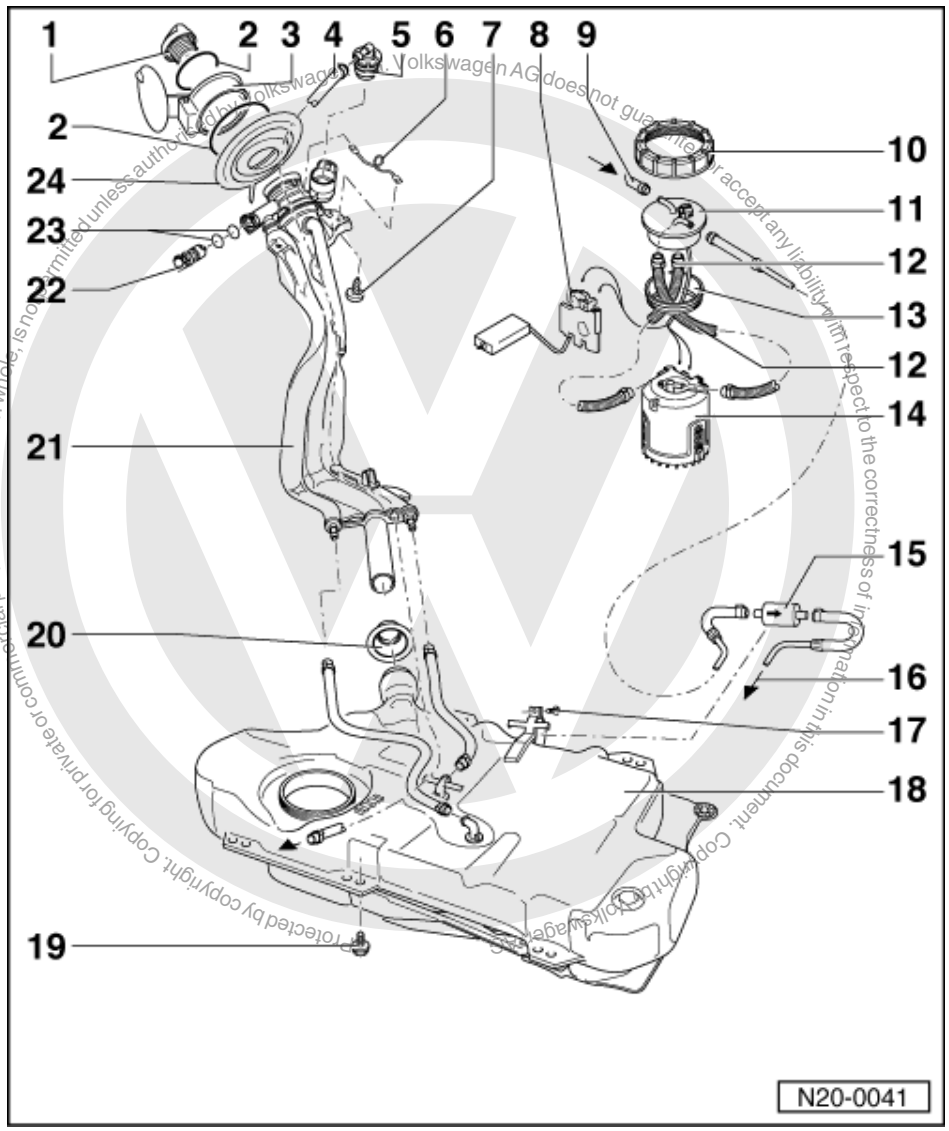

22 Vent valve

- Checking =>Fig. 2
- To remove pull locking latch lightly to inside -arrow- and pull valve out

23 O ring

- Renew if damaged

24 Cup

- For filler pipes

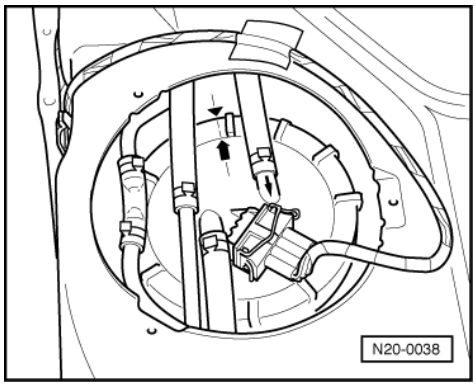

satelettronica

-> Fig. 1 Fitting position of fuel delivery unit flange

Marking on the flange must align with marking on the fuel tank.

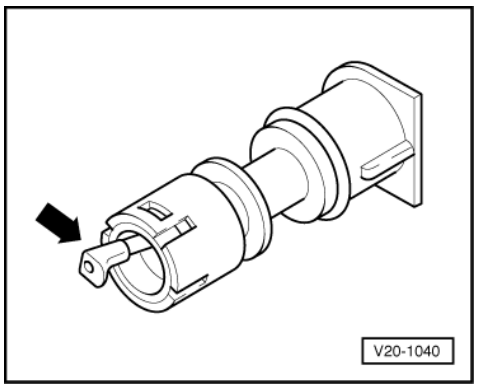

-> Fig. 2 Checking vent valve

Lever in rest position: Closed

Lever pushed in direction of arrow: Open

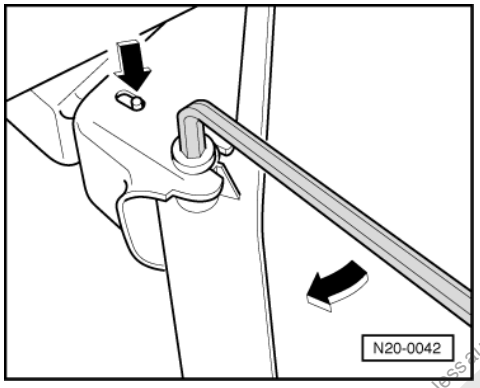

-> Fig. 3 Removing and installing accelerator pedal

To remove the accelerator pedal, press the accelerator pedal shaft locking device carefully out of the drilling - arrow-, then turn the shaft with a 6 mm hexagon key until it can be pulled out.

1.3 - Safety precautions when working on the fuel supply system

Warning!
Fuel supply pipes are under pressure! Before removing from hose connection wrap a cloth around the connection. Then release pressure by carefully pulling hose off connection.

When removing and installing the fuel gauge sender or fuel pump (fuel delivery unit) from a full or partly full fuel tank the following must be observed:

- Before commencing work, switch on exhaust extraction system and place an extraction hose close to the sender opening in the fuel tank to extract escaping petrol fumes.
  If no exhaust extraction system is available, a radial fan (as long as motor is not in air flow) with a displacement greater than 15 m3/h can be used.

Copyright by Volkswagen AG. Protected by copyright. Copyright by Volkswagen AG. Volkswagen AG does not guarantee or accept any liability with respect to the correctness of information in this document. Copyright by Volkswagen AG. Protected by copyright. Copyright by Volkswagen AG. Reproduction for commercial purposes, in part or in whole, is not permitted unless authorised by Volkswagen AG. Volkswagen AG does not guarantee or accept any liability with respect to the correctness of information in this document. Copyright by Volkswagen AG.
satelettronica

- Prevent skin contact with petrol! Wear fuel-resistant gloves!

1.4 - Rules for cleanliness

When working on the fuel supply/injection system, pay careful attention to the following "5 rules":

- Thoroughly clean all unions and the adjacent areas before disconnecting.
- Place parts that have been removed on a clean surface and cover. Do not use fluffy cloths!
- Carefully cover opened components or seal, if the repair cannot be carried out immediately.
- Only install clean components:
  Only unpack replacement parts immediately prior to installation.
  Do not use parts that have been stored loose (e.g. in tool boxes etc.).
- When the system is open:
  Do not work with compressed air if this can be avoided.
  Do not move vehicle unless absolutely necessary.

1.5 - Checking fuel pump

Special tools, testers and auxiliary items

- Remote control V.A.G 1348/3A with adapter cable V.A.G 1348/3-2
- Adapter set V.A.G 1594
- Multimeter V.A.G 1715
- Diode test lamp V.A.G 1527
- Current flow diagram
- Ring nut spanner 3217
- Pressure tester V.A.G 1318
- Adapter 1318/1
- Adapter 1318/7
- Adapter 1318/10
- Adapter 1318/13
- Measuring container
- Torque wrench V.A.G 1332 (40...200 Nm)

Test conditions

- The battery voltage must be OK.
- Fuse 18 must be OK.

Checking function and voltage supply

Note:

Check whether a coded radio is installed as during the forthcoming work sequences the battery earth strap must be disconnected. Obtain radio code first if necessary.

- Briefly operate starter. Fuel pump must be heard to run briefly -approx. 1 second-.

If the fuel pump does not run:

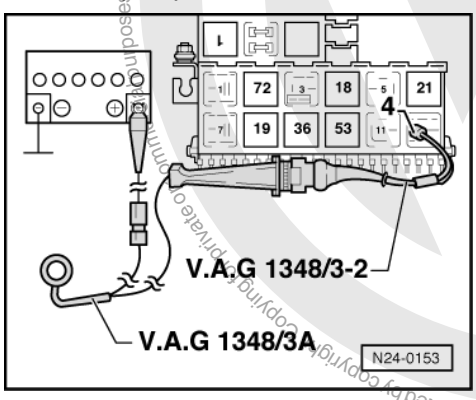

Protected by copyright. Copying for private or commercial purposes, in part or in whole, is not permitted unless authorised by Volkswagen AG. Volkswagen AG does not guarantee or accept any liability with respect to the correctness of information in this document. Copyright by Volkswagen AG.
satelettronica

Reproduced by Volkswagen AG. Volkswagen AG does not guarantee or accept any liability with respect to the correctness of information in this document. Copyright by Volkswagen AG. Reproduction, copying or publication for commercial purposes in part or in whole is not permitted unless authorised by Volkswagen AG.

- -> Pull the fuel pump relay (J17) out of relay plate with fuse box (relay position 12).

Note:

If the relay cannot be removed from the relay plate without tools then first disconnect battery earth strap.

- Connect remote control V.A.G 1348/3A with adapter cable V.A.G 1348/3-2 to contact 4 and battery positive (+).
- Operate remote control.

Fuel pumps run:

Check activation of fuel pump relay:

=> 1AV Injection and ignition system (4 valve); Repair group 01; Self-diagnosis; Final control diagnosis Self-diagnosis Final control diagnosis

Fuel pump does not run:

- Fold rear seat forwards.
- Remove cover in luggage boot floor.

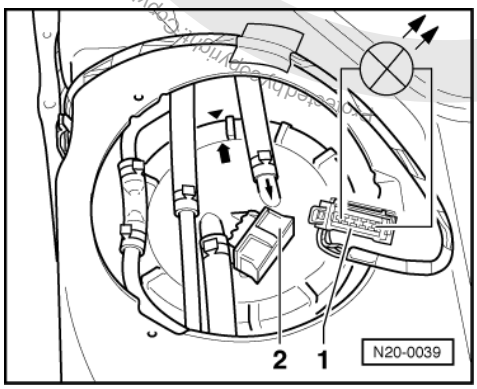

- -> Pull 4-pin connector -1- off fuel tank flange -2-.
- Connect diode test lamp V.A.G 1527 using aux. cables from V.A.G 1594 to the outer contacts of the connector.
- Operate remote control.
  LED must light up

LED does not light up:

- Locate and eliminate open circuit using current flow diagram

LED lights up (voltage supply OK.):

- Remove union nut from flange with 3217.
- Check that the electrical wires between flange and fuel pump are connected.

If not open circuit can be found:

- Renew fuel delivery unit.

Checking delivery rate

Test conditions

- The voltage supply for the fuel pump OK.
- Remote control V.A.G 1348/3A is still connected.

satelettronica

Test sequence

- Remove filler cap from fuel tank filler neck.

> Warning!
> Fuel supply pipes are under pressure! Before disconnecting hose wrap a cloth around the connection. Then release pressure by carefully pulling hose off connection.

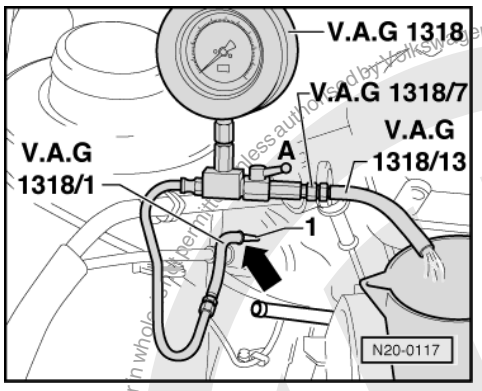

- -> Pull fuel supply hose (white marking) off fuel supply pipe -1-.
- Connect pressure gauge V.A.G 1318 with adapter /1 to fuel supply pipe.
- Screw adapter hose /13 with adapter /7 to pressure gauge and hold hose in measuring container.
- Open pressure gauge cut-off tap. Lever points in throughflow direction -A-.
- Operate remote control V.A.G 1348/3A. Whilst doing this slowly close the cut-off tap, until gauge shows a pressure of
  3 bar.
  From now on do not alter the position of the cut-off tap.
- Empty measuring container.
- The fuel pump delivery range is dependent upon battery voltage. Therefore connect the multimeter with adapter cables from V.A.G 1594 to the vehicle battery.
- Operate remote control for
  30 seconds
  and measure battery voltage

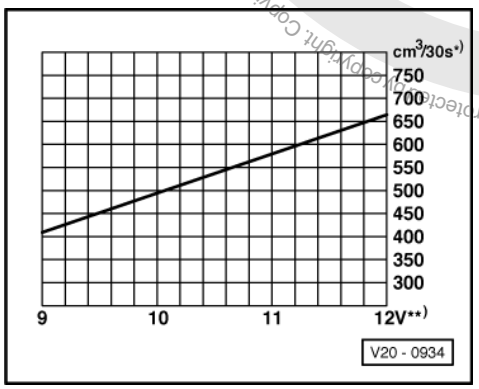

- -> Compare the quantity of fuel delivered with specification.

  *) Minimum delivery cm3/30 seconds

  **) Voltage at fuel pump with engine stationary and pump running (approx. 2 volts less than battery voltage).

If the minimum delivery rate is not attained:

- Check the fuel pipes for possible restrictions (kinks) or blockages.

Copyright by Volkswagen AG. Volkswagen AG does not guarantee or accept any liability with respect to the correctness of information in this document. Copyright by Volkswagen AG.
Protected by copyright. Copying for private or commercial purposes, in whole or in part, is not permitted unless authorised by Volkswagen AG.
satelettronica

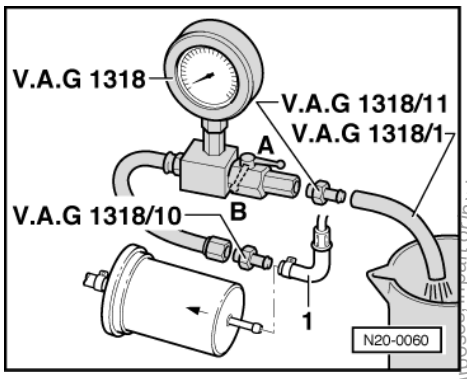

- -> Pull the supply hose -1- off fuel filter inlet.
- Connect the pressure gauge V.A.G 1318 to hose with adapter /10.
- Repeat delivery rate check.

If the minimum delivery rate is now attained:

- Replace the fuel filter.

If the minimum delivery rate is again not attained:

- Remove the fuel delivery unit and check the strainer filter for soiling.

Only when up to now no fault has been detected:

- Replace the fuel delivery unit.

If the delivery rate has been attained but nevertheless you suspect a fuel supply system fault (e.g. intermittent failure of fuel supply system):

- Check the current draw of the fuel pump as follows:
- Reconnect all disconnected fuel pipes.

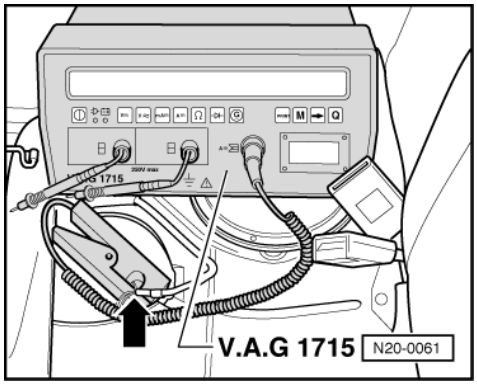

- -> Connect the multimeter V.A.G 1715 using the current clamp to the red/yellow wire from wiring harness.
- Start the engine and run at idling speed.
- Measure the current draw of the fuel pump.
  Specification: max. 8 amps.

Note:

If the fuel system malfunction is intermittent, you can perform the check during a test drive, to do this a 2nd person is necessary.

If the current draw is exceeded:

- Replace the fuel delivery unit.

Protected by copyright. Copyright by Volkswagen AG. Volkswagen AG does not guarantee or accept any liability with respect to the correctness of information in this document. Copying for private or commercial purposes, in part or in whole, is not permitted unless authorised by Volkswagen AG.
satelettronica

Checking fuel pump non-return valve

Test conditions

- Remote control V.A.G 1348/3A is still connected.
- Pressure gauge V.A.G 1318 is still connected.

Test sequence

Note:

With this check the fuel supply pipe connections from the fuel delivery unit to the point at which the pressure gauge V.A.G 1318 is connected will be checked for leaks at the same time.

- Close pressure gauge cut-off tap (lever at right angles to direction of flow).
- Operate remote control at short intervals, until a pressure of
  3 bar
  has built up.

Warning! Danger of spray when opening the cut-offtap, hold container over the pressure gauge free connection.

- If pressure builds up too high, lower excess pressure by carefully opening the cut-off tap.
- Watch pressure drop. After 10 minutes the pressure must not drop below
  2 bar.

If the pressure drops further:

- Check pipe connections for leaks.

If no wiring fault is detected:

- Replace the fuel delivery unit.

1.6 - Removing and installing fuel delivery unit

Special tools, testers and auxiliary items

- Ring nut spanner 3217
- Torque wrench V.A.G 1332 (40...200 Nm)

Removing

- First check whether a coded radio is fitted. If this is the case obtain the anti-theft coding.
- Note safety precautions before starting work => Page 92
- With ignition switched off disconnect battery earth strap.
- Fold rear seat forwards.
- Remove cover in luggage boot floor.

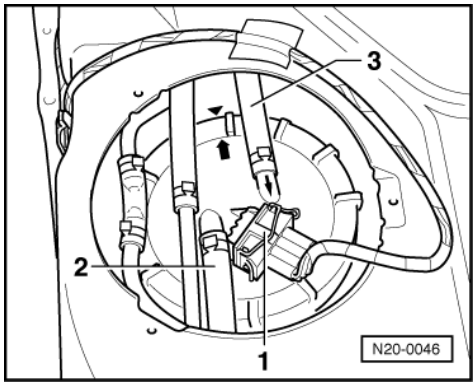

Protected by copyright. Copying for private or commercial purposes, in part or in whole, is not permitted unless authorised by Volkswagen AG. Volkswagen AG does not guarantee or accept any liability with respect to the correctness of information in this document. Copyright by Volkswagen AG.
satelettronica

- -> Pull connector -1- and supply and return pipes -2, 3- off flange.
- Remove union nut from flange with 3217.
- Pull flange and seal out of the opening in fuel tank.
- Release delivery unit from bayonet connection by turning to left and remove from fuel tank.

Note:

If the delivery unit is to be renewed then drain old delivery unit before disposal.

Installing

- Installing the fuel delivery unit is carried out in the reverse order.

Notes:

- Coat flange seal with fuel when fitting.
- When inserting the fuel delivery unit ensure that the fuel gauge sender is not bent.
- When the fuel delivery unit is correctly installed the fuel gauge sender float points to fuel filler pipes.
- Fitting position of fuel delivery unit flange => Page 92 , Fig. 1 .

1.7 - Removing and installing fuel tank

Removing

- First check whether a coded radio is fitted. If this is the case obtain the anti-theft coding.
- With ignition switched off disconnect battery earth strap.
- Fold rear seat forwards.
- Remove cover in luggage boot floor.

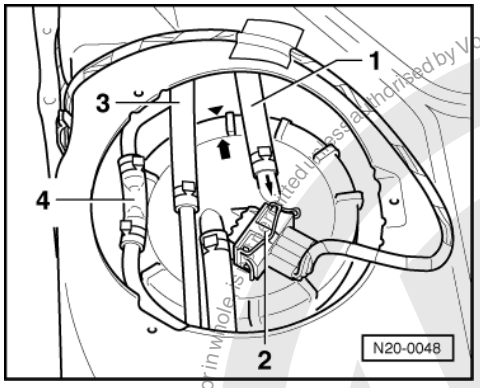

- -> Pull fuel return hose -1- and connector -2- off flange.
- Disconnect fuel supply pipe -3- and breather pipe -4- at hose connections.
- Drain fuel tank.

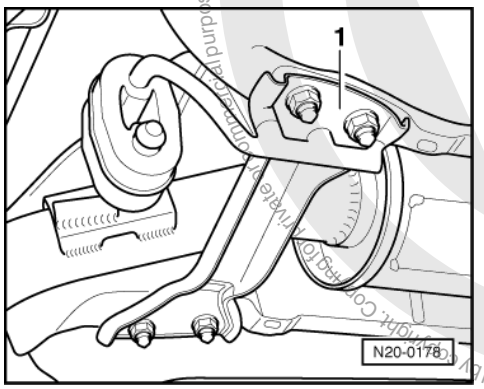

- -> Remove support bracket -1- from body.
- Remove all rear exhaust system mountings from body. Then lower the exhaust system slightly and secure to body with wire.

satelettronica
Protected by Copyright. Copyright by Volkswagen AG. Volkswagen AG does not guarantee or accept any liability with respect to the correctness of information in this document. Copyright by Volkswagen AG.

- Remove rear right wheel.
- Detach filler pipes from body.
- Take filler cap off filler neck and detach filler neck from cup.
- Remove filler neck.
- Now the fuel tank can be detached from body and removed together with the heat shield.

Installing

Installing is basically in the reverse order but note following:

- Breather and fuel hoses are to be installed kink-free.
- Secure fuel hoses with screw-type clamps.
- Do not interchange supply and return hose (return hose blue or blue markings, supply hose black).

1.8 - Adjusting throttle cable

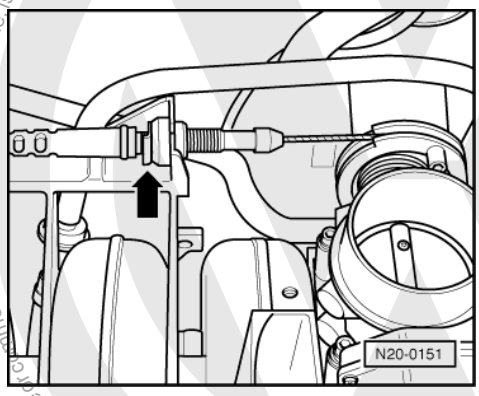

- -> Adjust throttle cable by moving the retainer at the support bracket so that the full throttle position is just attained at the throttle valve lever.

Protected by copyright. Copyright by Volkswagen AG.
Copyright by Volkswagen AG. Volkswagen AG does not guarantee or accept any liability with respect to the correctness of information in this document. Copying for private or commercial purposes, in part or in whole, is not permitted unless authorised by Volkswagen AG.
satelettronica

1.9 - Removing and installing parts of the activated charcoal filter system

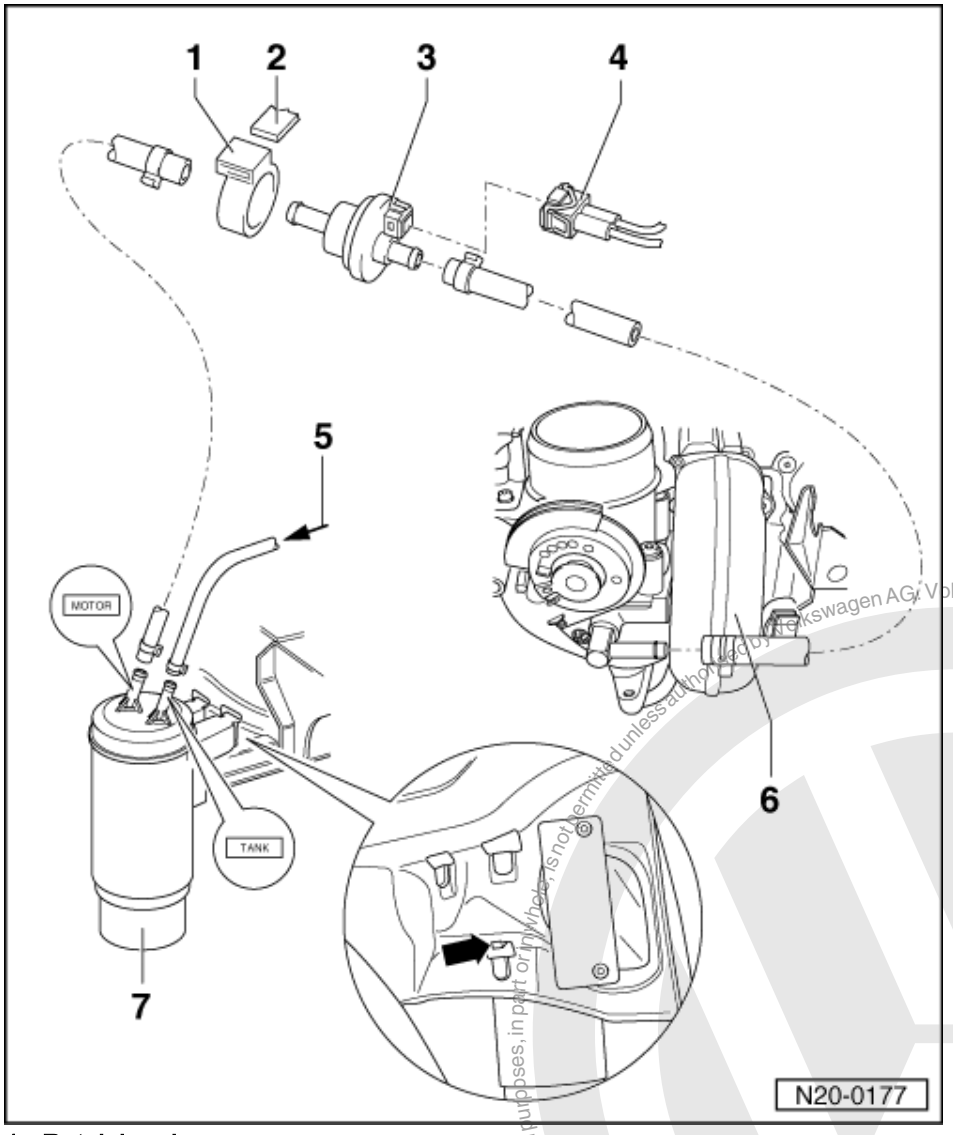

1 Retaining ring
2 Bracket
- On body front right

3 Solenoid valve 1 (N80)
- Valve closed with ignition switched off
- Valve activated (pulsed) by 1AV control unit when the engine is warm
- Checking:

=> Repair group 01; Self-diagnosis; Final control diagnosis Self-diagnosis Final control diagnosis

4 Connector
5 Breather pipe
- From gravity/overflow valve on fuel tank
  => Page 87 , Item 4

Protected by copyright. Copying for private or commercial purposes, in part or in whole, is not permitted unless authorised by Volkswagen AG. Volkswagen AG does not guarantee or accept any liability with respect to the correctness of information in this document. Copyright by Volkswagen AG.
satelettronica

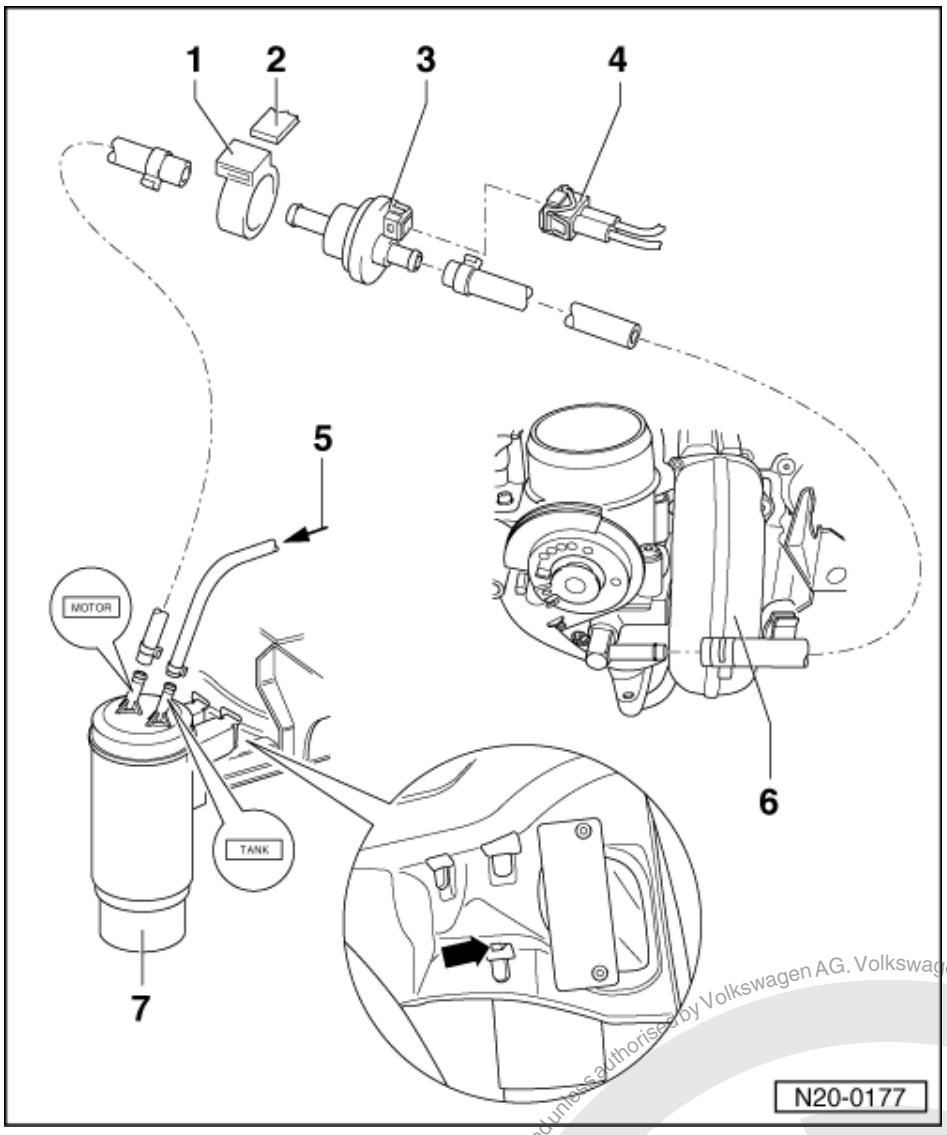

6 Intake manifold
7 Activated charcoal filter
- Location: in front right wheel housing
- Connections "MOTOR" to solenoid valve 1 - 3 -
- Connections "TANK" with vacuum non-return valve
- To remove, release securing lug -arrow- and slide container out upwards

1.10 - Checking fuel tank breather

Special tools, testers and auxiliary items

- Hand vacuum pump V.A.G 1390
- Vacuum tester V.A.G 1368

Test conditions

- Ignition must be switched off

satelettronica
Protected by copyright. Copying for private or commercial purposes, in part or in whole, is not permitted unless authorised by Volkswagen AG. Volkswagen AG does not guarantee or accept any liability with respect to the correctness of information in this document. Copyright by Volkswagen AG.

Protected by copyright. Copying for private or commercial purposes, in part or in whole, is not permitted unless authorised by Volkswagen AG. Volkswagen AG does not guarantee or accept any liability with respect to the correctness of information in this document. Copyright by Volkswagen AG.

Checking activated charcoal filter

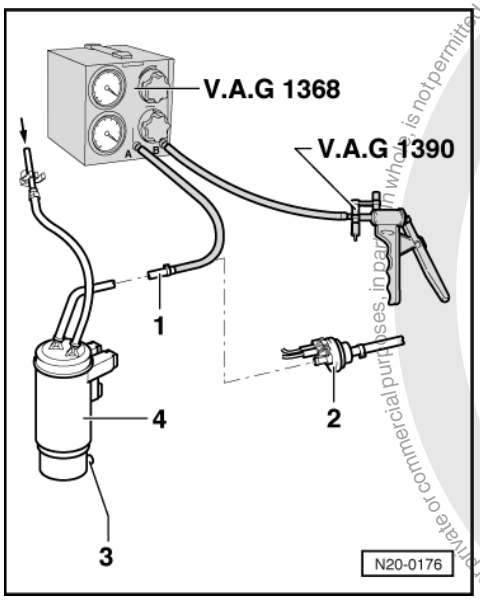

- -> Pull vent hose -1- from activated charcoal filter off solenoid valve -2-.
- Connect hand vacuum pump V.A.G 1390 and vacuum tester V.A.G 1368 as shown to hose -1-.
- Set vacuum tester to -A/B- position.
- Operate hand vacuum pump V.A.G 1390 several times.
  Vacuum must not
  build-up.

If vacuum builds-up:

- Check breather connection -3- located on bottom of activated charcoal filter -4- for soiling, clean if necessary.

If vacuum does not build-up:

- Temporarily seal breather connection -3- and operate vacuum pump again several times.
  A vacuum must build up.
  (Vacuum non-return valve in activated charcoal filter must close).

If vacuum does not build-up:

- Renew activated charcoal filter.

Checking lines to fuel tank and fuel cap

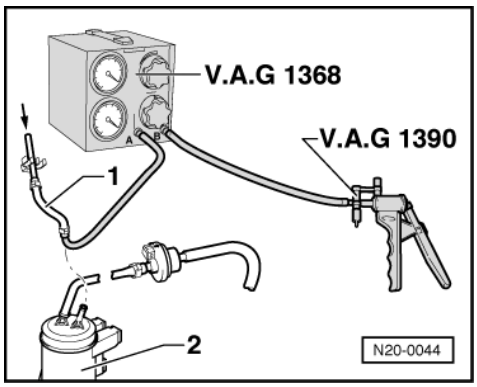

- -> Pull vent hose -1- from fuel tank off activated charcoal filter -2-.
- Connect hand vacuum pump V.A.G 1390 and vacuum tester V.A.G 1368 as shown to hose -1-.
- Set vacuum tester to -A/B- position.
- Remove fuel filler cap from filler neck.
- Operate V.A.G 1390 several times. Vacuum must

satelettronica

not build-up.

If vacuum builds-up:

- Check gravity/overflow valve => Page 87 , Item 5
- Check line -1- from fuel tank for blockage.

If vacuum does not build-up:

- Refit fuel filler cap.
- Operate hand vacuum pump V.A.G 1390 several times.
  Vacuum must not build-up.

Note:

If the fuel level in the tank is low the hand vacuum must be operated at least 20...30 times.

If vacuum builds-up:

- Replace fuel tank cap.

Protected by copyright. Copyright for private or commercial purposes, in part or in whole, is not permitted unless authorised by Volkswagen AG. Volkswagen AG does not guarantee or accept any liability with respect to the correctness of information in this document. Copyright by Volkswagen AG.

satelettronica

26 - Exhaust system

1 - Removing and installing parts of exhaust system

1.1 - Removing and installing parts of exhaust system

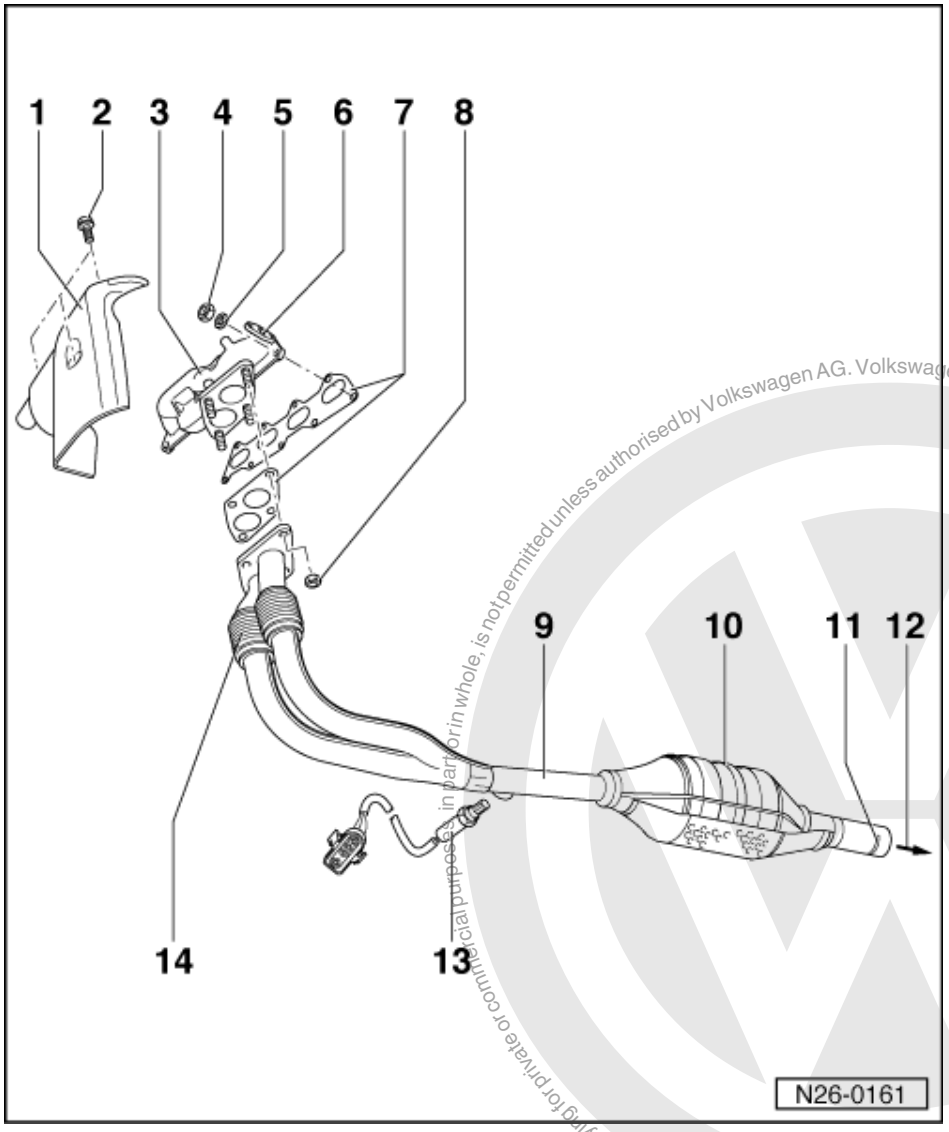

Notes:

- After working on the exhaust system ensure that the system is not under stress, and that it has sufficient clearance from the bodywork. If necessary, loosen clamps and align silencer and exhaust pipe so that sufficient clearance is maintained to the bodywork and the support rings are evenly loaded.
- Renew self-locking nuts.

Exhaust manifold, front exhaust pipe with catalyst, Lambda probe

1 Warm air collector plate
2 10 Nm

satelettronica
Copyright by Volkswagen AG. Volkswagen AG does not guarantee or accept any liability with respect to the correctness of information in this document. Copying for private or commercial purposes, in part or in whole, is not permitted unless authorised by Volkswagen AG.

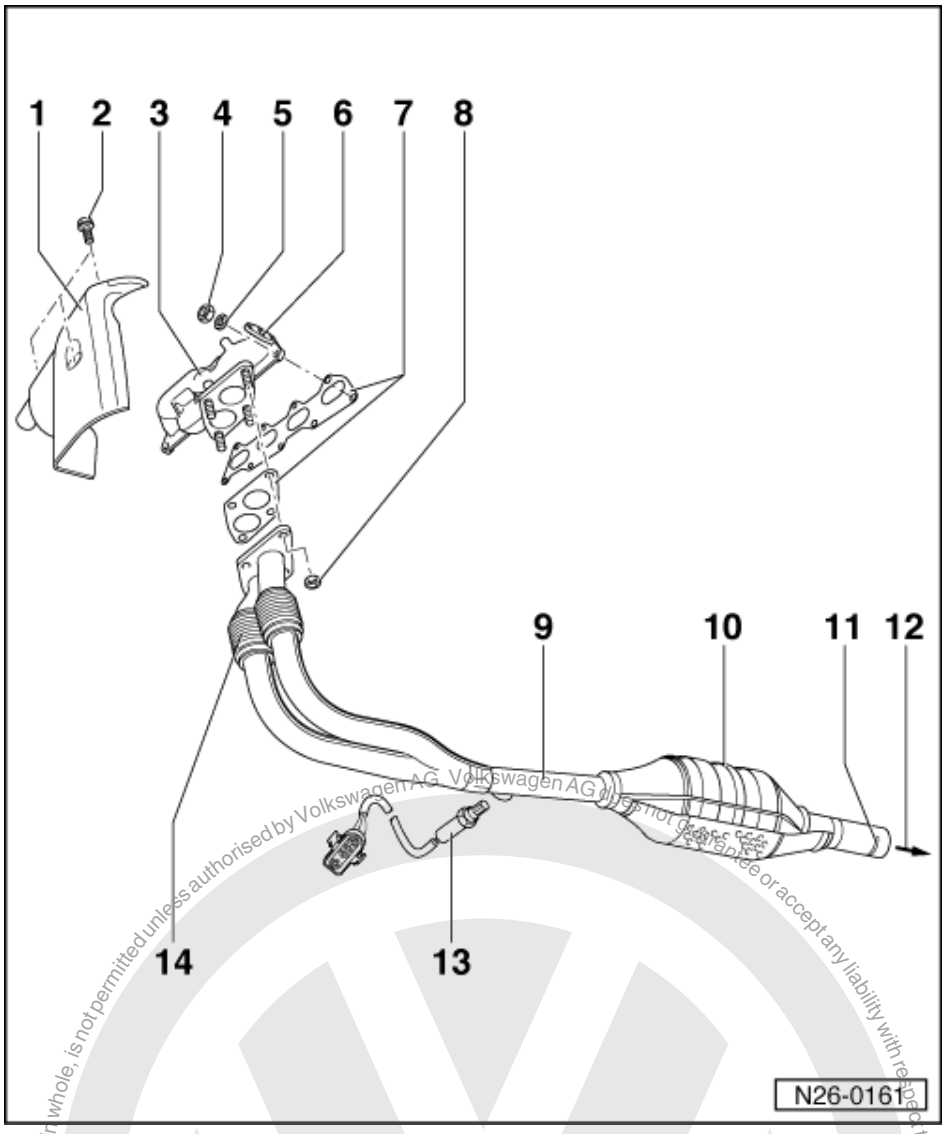

3 Exhaust manifold
4 Lock nut, 25 Nm
- Grease thread with "G5"

5 Washer
6 Exhaust gas recirculation valve flange
- => Page 110 , item 4

7 Gasket
- Renew

8 40 Nm
- Grease thread with "G5"

9 Front exhaust pipe with catalyst
10 Catalyst
11 Marking
- Three times on circumference

12 To silencer

Protected by copyright. Copying for private or commercial purposes, in part or whole, is not permitted unless authorised by Volkswagen AG. Volkswagen AG does not guarantee or accept any liability with respect to the correctness of information in this document. Copyright by Volkswagen AG.

satelettronica

Protected by copyright. Copying for private or commercial purposes, in part or in whole, is not permitted unless authorised by Volkswagen AG. Volkswagen AG does not guarantee or accept any liability with respect to the correctness of information in this document. Copyright by Volkswagen AG.

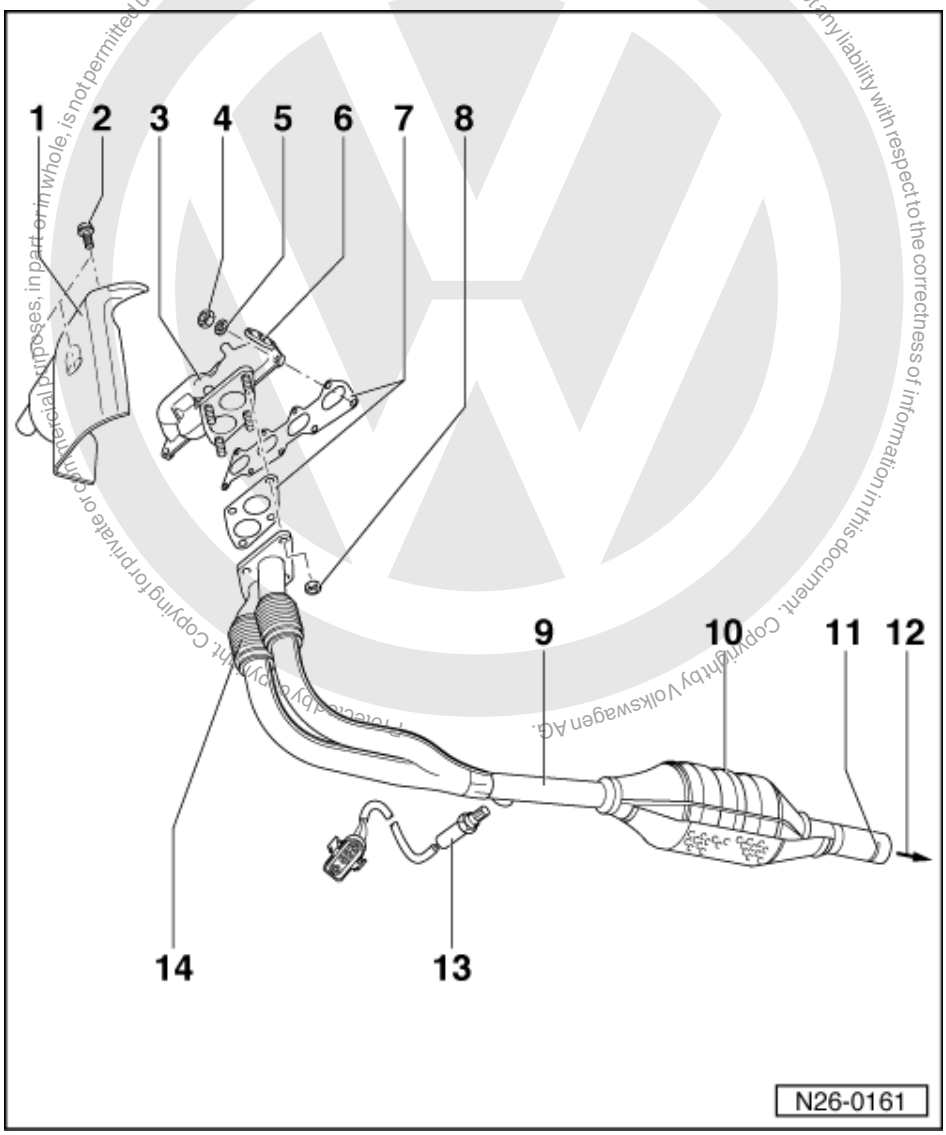

13 Lambda probe, 55 Nm

- Grease only the threads with "G5"; "G5" must not get into the slots on the probe body
- Remove and install with 3337
- Checking:

=> Repair group 24; injection and ignition system injection and ignition system

14 Joint

satelettronica

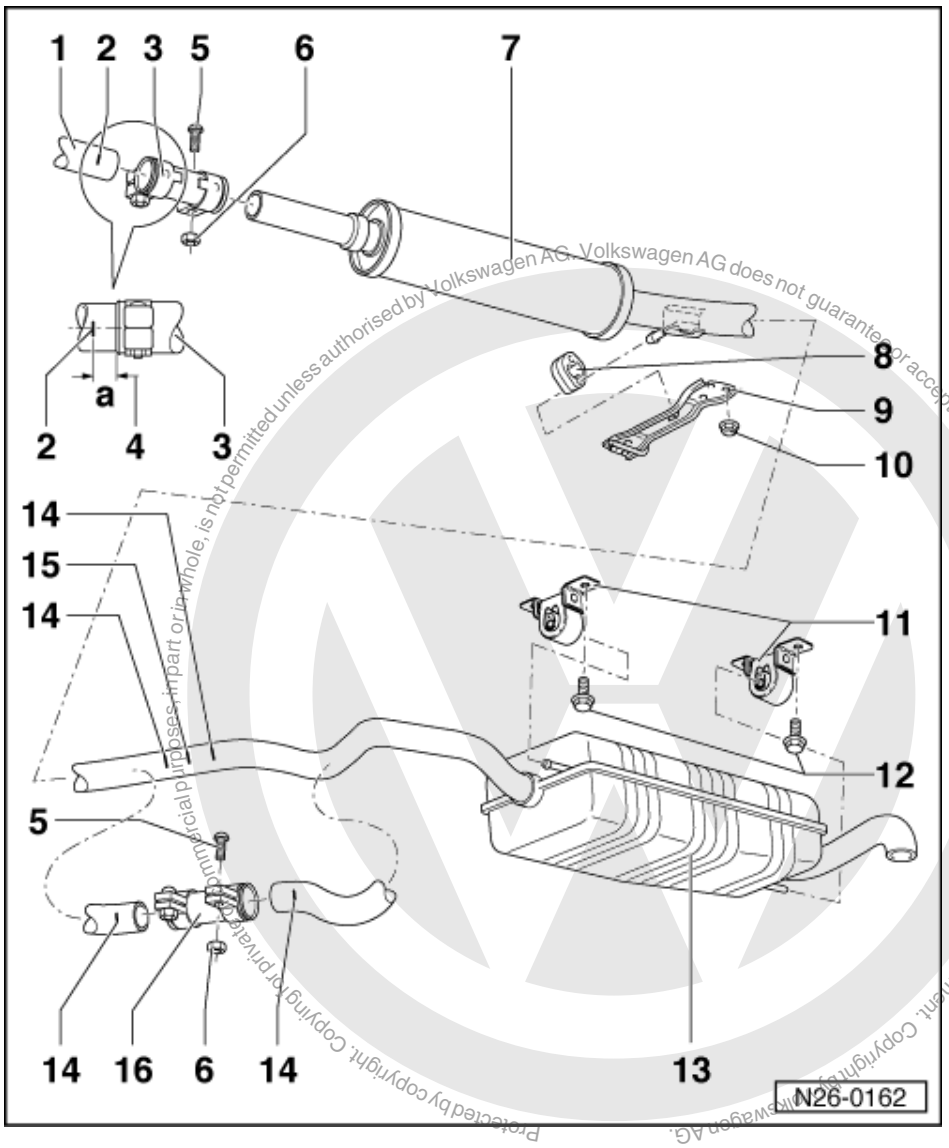

Silencer with mountings

1 Front exhaust pipe
2 Marking
- Three times on circumference

3 Double clamp
4 Dimension-a- = ca. 5 mm
5 Carriage bolt
6 M8: 25 Nm
M10: 40 Nm
7 Front silencer1)
8 Mounting
- Renew if damaged

9 Connecting piece
10 15 Nm
11 Mounting

Protected by copyright. Copying for private or commercial purposes, in part or in whole, is not permitted unless authorised by Volkswagen AG. Volkswagen AG does not guarantee or accept any liability with respect to the correctness of information in this document. Copyright by Volkswagen AG.
satelettronica

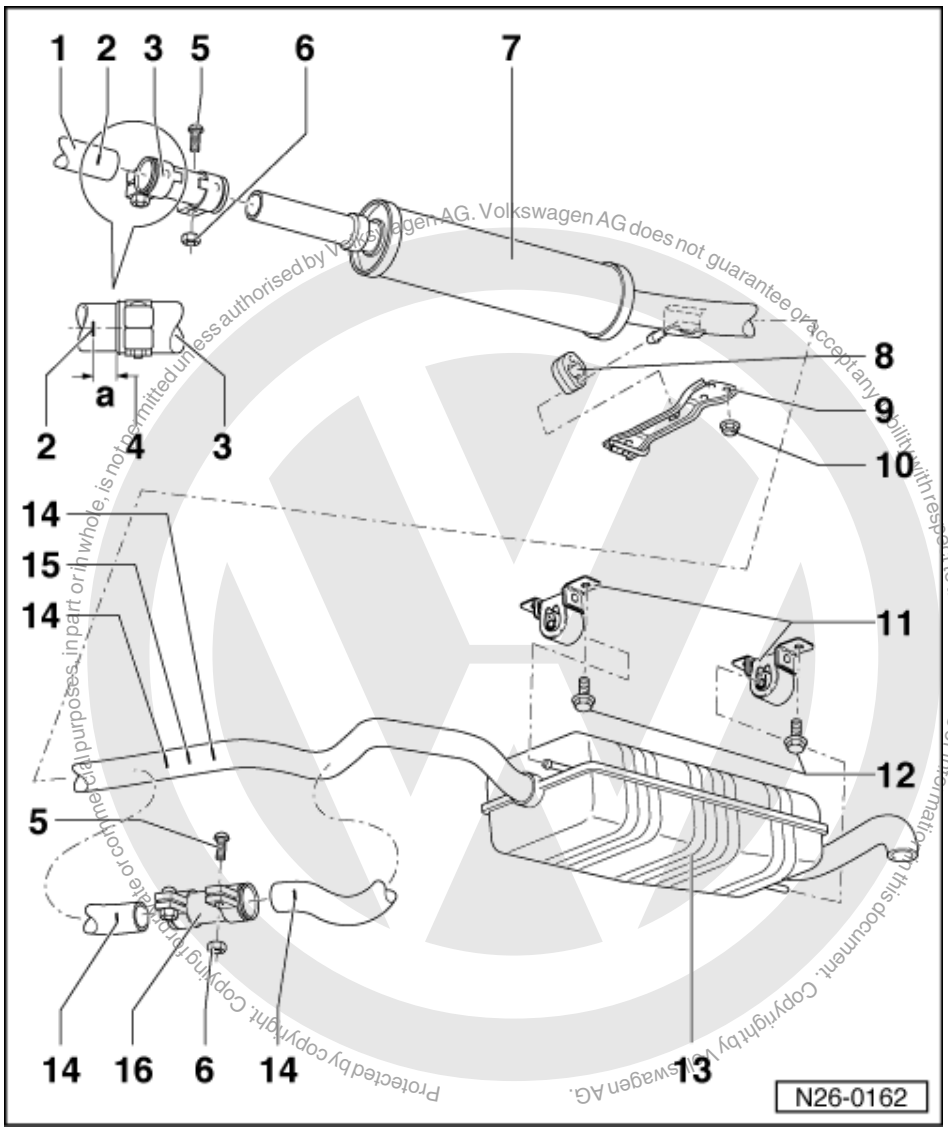

12 20 Nm + 1/4 turn (90 °) further

13 Rear silencer1)

14 Marking

- Visible from below
- Double clamp - 16 - for repairs

15 Separating point

- For repair cases1)
- Marked by indentation on connecting pipe

16 Repair double clamp

- Must be slid onto the markings - 14 -

satelettronica

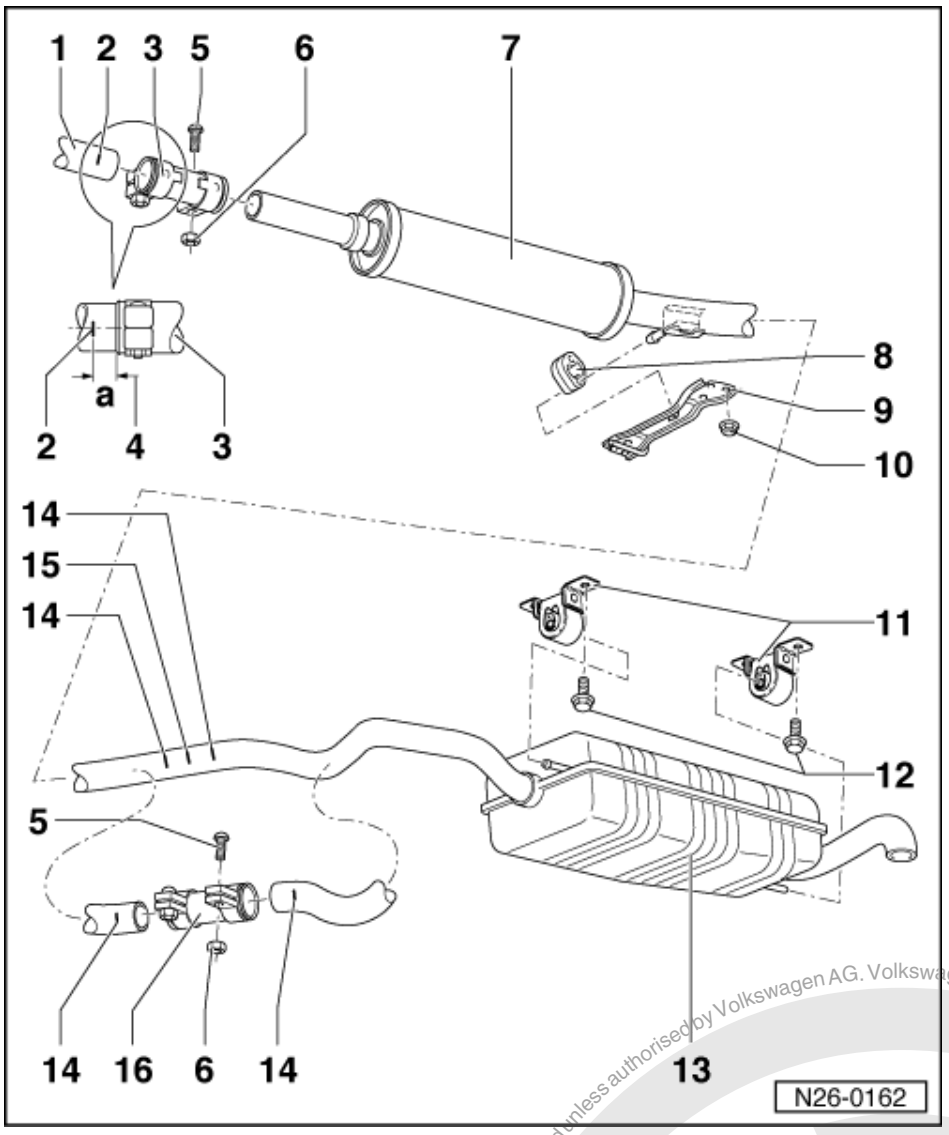

1) Front and rear silencers are installed as a single component as standard. In repair cases the front and rear silencers are supplied individually and a repair double clamp item 16 is supplied as a joint. Cut through connecting pipe at separating point - 15 - with a body saw e.g. V.A.G 1523.

1.2 - Exhaust gas recirculation system

Notes:

- The activation of the exhaust gas recirculation system is undertaken by the 1AV control unit (J382) via exhaust gas recirculation valve (N18) to exhaust gas recirculation valve.
- Checking exhaust gas recirculation valve (N18).

=> Repair group 01; Self-diagnosis; Final control diagnosis Self-diagnosis Final control diagnosis

- The cone shaped plunger in the mechanical exhaust gas recirculation valve ensures that various cross sectional openings are possible at different plunger lifts.
- Every conceivable valve position possible through pulsed control.

Protected by copyright. Copying for private or commercial purposes, in part or in whole, is not permitted unless authorised by Volkswagen AG. Volkswagen AG does not guarantee or accept any liability with respect to the correctness of information in this document. Copyright by Volkswagen AG.
satelettronica

1.3 - Removing and installing parts of exhaust gas recirculation system

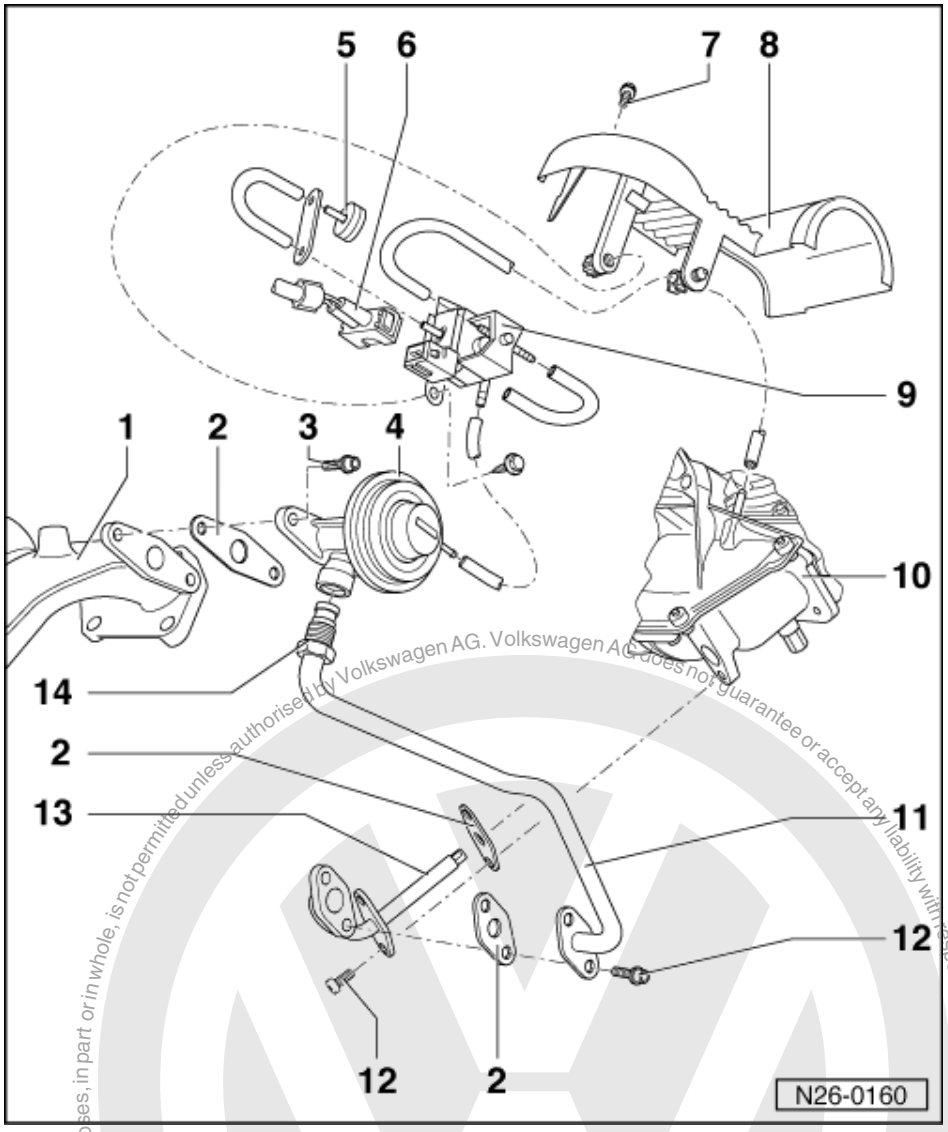

1 Exhaust manifold
2 Gasket
- Renew

3 10 Nm
4 Exhaust gas recirculation valve
- Checking => Page 111
- Checking activation

=> Repair Group 01; Self-diagnosis; Final control diagnosis Self-diagnosis Final control diagnosis

5 Filter
6 Connector
- 2 pin

7 10 Nm
8 Cover

Protected by copyright. Copyright by Volkswagen AG. Volkswagen AG does not guarantee or accept any liability with respect to the correctness of information in this document. Copying for private or commercial purposes, in part or in whole, is not permitted unless authorised by Volkswagen AG.
satelettronica

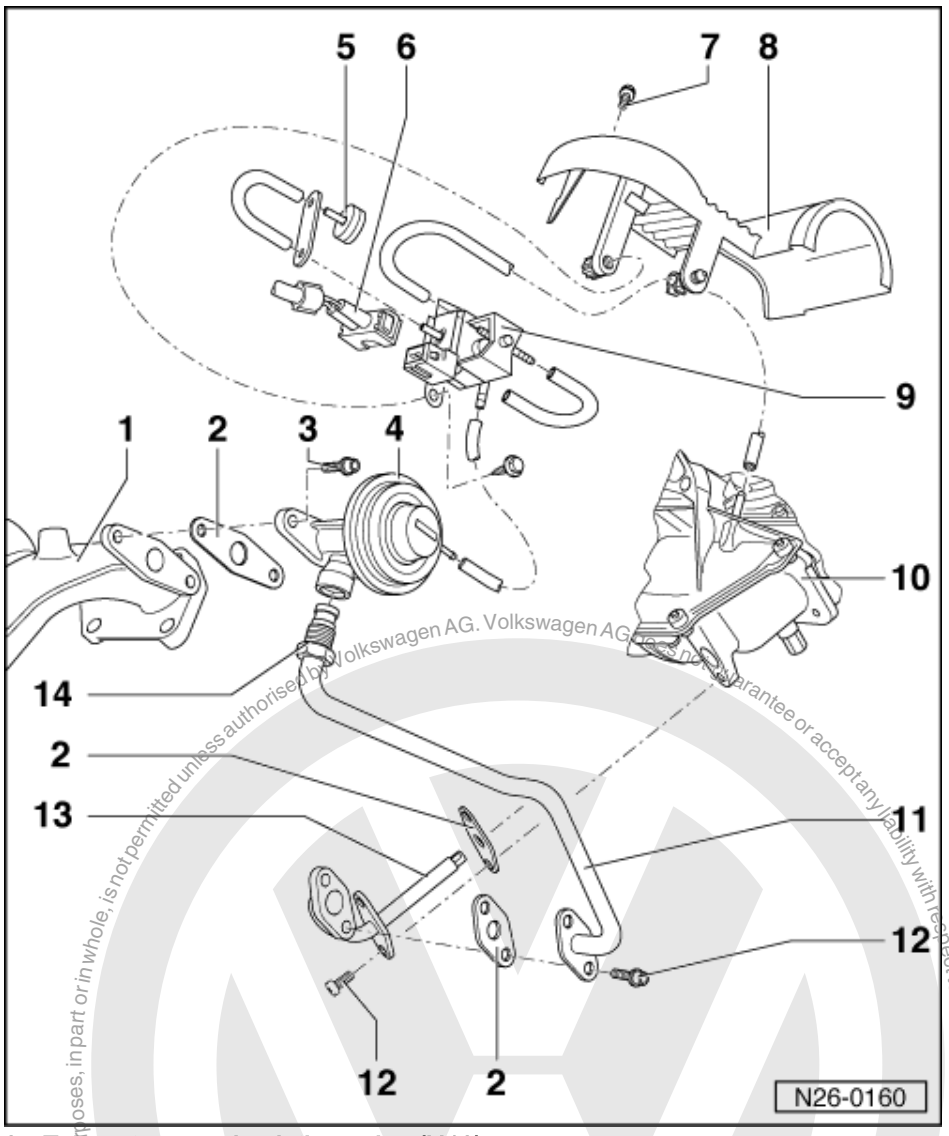

9 Exhaust gas recirculation valve (N18)
- Checking:

=> Repair Group 01; Self diagnosis; Final control diagnosis Self diagnosis Final control diagnosis

10 Intake manifold
11 Connecting pipe
12 10 Nm
13 Outlet pipe
14 35 Nm

Protected by copyright. Copying for private or commercial purposes, in part or in whole, is not permitted unless authorised by Volkswagen AG. Volkswagen AG does not guarantee or accept any liability with respect to the correctness of information in this document. Copyright by Volkswagen AG.

satelettronica

1.4 - Checking exhaust gas recirculation valve

Special tools, testers and auxiliary items

- Hand vacuum pump V.A.G 1390

Test sequence

- Pull vacuum hose off exhaust gas recirculation valve.
- Connect hand vacuum pump V.A.G 1390 to valve.

- Start the engine and run at idling speed.

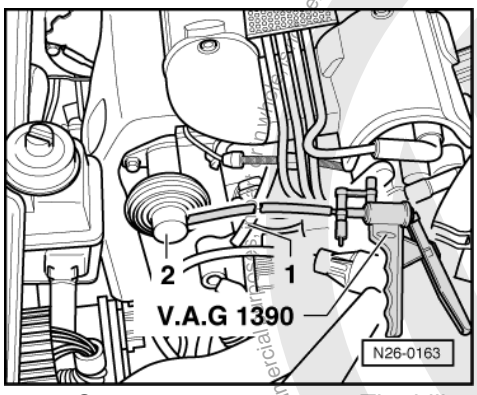

- -> Operate vacuum pump. The idling speed must change. If the valve is fully open the engine will stop.

If the idling speed does not change:

- Remove the exhaust gas recirculation valve.
- Operate vacuum pump. The valve must open.
- Release vacuum again. The valve must close again.
- Also check whether the exhaust gas recirculation system is blocked.

Protected by copyright. Copyright by Volkswagen AG.
Unauthorised use or distribution is prohibited and may be prosecuted. Volkswagen AG does not guarantee or accept any liability with respect to the correctness of information in this document.
satelettronica